Suction Filters

LS 025 · LS 035

In-line mounting · Connection up to G¾ · Nominal flow rate up to 33 l/min

Suction Filters LS 025

Description

Application

To be installed in the suction line of the pumps of hydraulic systems resp. upstream of the charge pumps of hydrostatic drives.

Performance features

Protection against wear:
By means of filter elements that, in full-flow filtration, meet even the highest demands regarding cleanliness classes.

Protection against malfunction:
By means of full-flow filtration in the system return, the pumps above all are protected from dirt particles remaining in the system after assembly, repairs, or which are generated by wear or enter the system from outside.

Filter elements

Flow direction from outside to center. The star-shaped pleating of the filter material results in:

- large filter surfaces
- low pressure drop
- high dirt-holding capacities
- long service life

Filter maintenance

By using a clogging indicator the correct moment for maintenance is stated and guarantees the optimum utilization of the filter life.

Materials

Filter head:	Aluminium alloy
Filter bowl:	Polyamide, GF reinforced
Seals:	NBR (FPM on request)
Filter media:	Paper-cellulose web, impregnated with resin

Accessories

Electrical and optical clogging indicators are available.
Dimensions and technical data see catalogue sheet 60.20.

Characteristics

Nominal flow rate

Up to 33 l/min (see Selection Chart, column 2)
The nominal flow rates indicated by ARGO-HYTOS are based on the following features:

- Closed by-pass valve at $\nu \leq 200$ mm²/s
- Element service life > 1000 operating hours at an average fluid contamination of 0,07 g per l/min flow volume
- Flow velocity in the connection lines ≤ 1,5 m/s
  If units not equipped with a bypass valve are used in hydrostatic drives, the recommendations regarding their technical application given on catalogue sheet 10.310 should be observed.

Connection

Threaded ports according to ISO 228 or DIN 13. Sizes see Selection Chart, column 6 (other port threads on request)

Filter fineness

50 µm(c)
ß-values according ISO 16889
(see Selection Chart, column 4 and diagram Dx)

Dirt-holding capacity

Values in g test dust ISO MTD according to ISO 16889
(see Selection Chart, column 5)

Hydraulic fluids

Mineral oil and biodegradable fluids
(HEES and HETG, see info-sheet 00.20).

Temperature range

-30 °C ... +100 °C (temporary -40 °C ... +120 °C)

Viscosity at nominal flow rate

- at operating temperature: $\nu < 60$ mm²/s
- start-up viscosity:
  Determine ν_{max}, observing the permissible pressure at the pump inlet according to diagram D; determine Δp as a function of the viscosity (take into account the pressure loss in the connecting lines!)
- at initial operation:
  The recommended starting viscosity can be read from the diagram D (pressure drop as a function of the kinematic viscosity) as follows: Find the 70 % Δp of the cracking pressure of the by-pass valve on the vertical axis. Draw a horizontal line so that it intersects the Δp curve at a point. Read this point on the horizontal axis for the viscosity.

Mounting position

Vertical mounting to be preferred, filter head on top.

Δp-curves for complete filters in Selection Chart, column 3

D1 Pressure drop as a function of the **flow volume** at ν = 35 mm²/s (0 = casing empty)

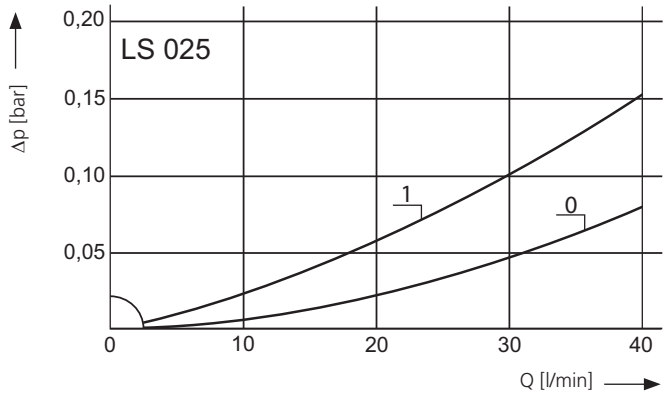

Pressure drop as a function of the **kinematic viscosity** at nominal flow

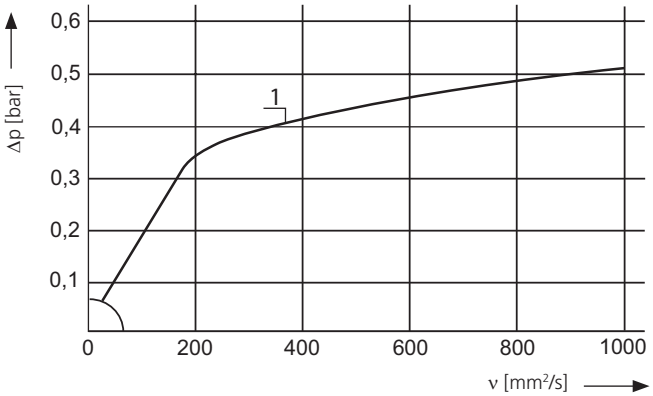

D2 Pressure drop as a function of the **flow volume** at ν = 35 mm²/s (0 = casing empty)

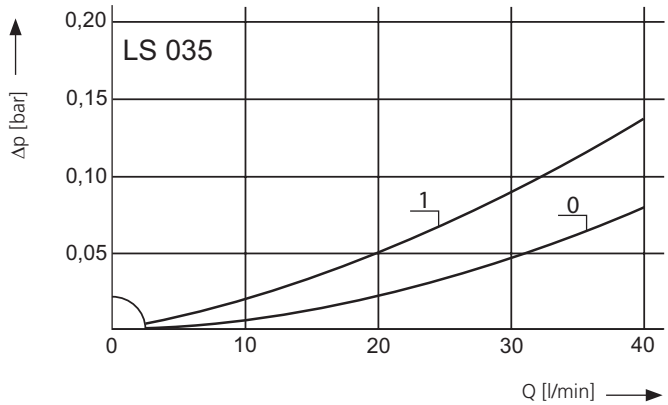

Pressure drop as a function of the **kinematic viscosity** at nominal flow

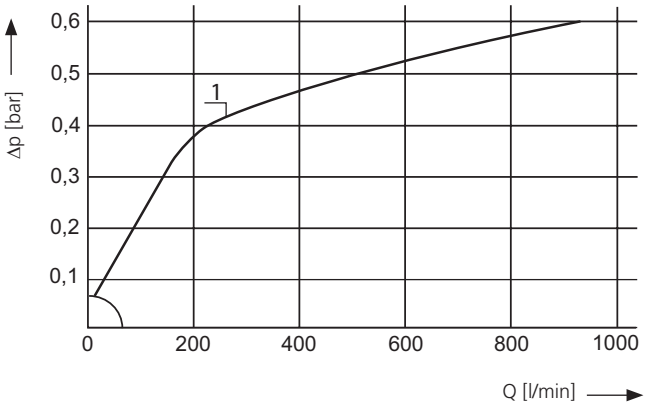

Filter fineness curves in Selection Chart, column 4

Dx Filtration ratio β as a function of particle size x obtained by the Multi-Pass-Test according to ISO 16889

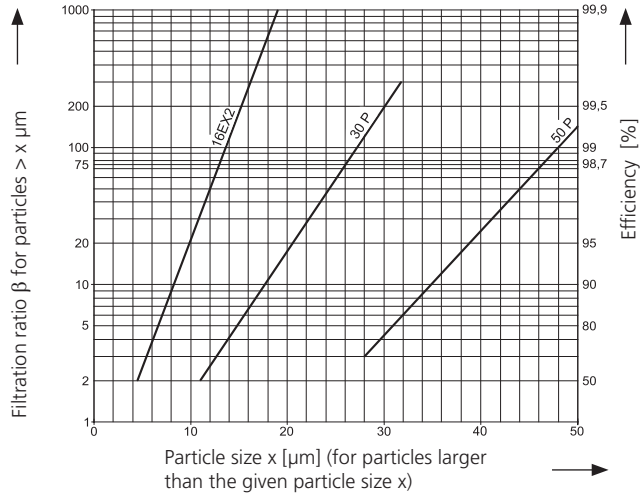

The abbreviations represent the following β-values resp. finenesses:

For EXAPOR®MAX 2 and Paper elements:

16EX2 = $\overline{\beta}_{16\,(c)}$ = 200 EXAPOR®MAX 2
30P = $\overline{\beta}_{30\,(c)}$ = 200 Paper
50P = $\beta_{50(c)}$ = 200 Paper

Based on the structure of the filter media of the 30P and 50P paper elements, deviations from the printed curves are quite probable.

For screen elements:

40S	=	screen material with mesh size	40 µm
60S	=	screen material with mesh size	60 µm
100S	=	screen material with mesh size	100 µm

Tolerances for mesh size according to DIN 4189.

For special applications, finenesses differing from these curves are also available by using special composed filter material.

Selection Chart

Part No.	Nominal flow rate	Pressure drop see diagram **D**/curve no.	Filter fineness see diagr. **Dx**	Dirt holding capacity Filter surface in ( )	Connection A/B	Cracking pressure of by-pass	Symbol	Replacement filter element Part No	Weight	Remarks
	l/min			g		bar			kg	
1	2	3	4	5	6	7	8	9	10	11
LS 025-152	25	**D1**/1	50P	15	G¾	-0,3	2	P3.0714-02	0,9	-
LS 035-152	33	**D2**/1	50P	19	G¾	-0,3	2	P3.0717-02	1,0	-

All filters are delivered with a plugged clogging indicator connection G¼. As clogging indicators either manometers or vacuum switches can be used.

For the appropriate clogging indicator see catalogue sheet 60.20.

Remarks:

- The start of the red area respectively the actuating pressure of the vacuum switch has always to be higher than the cracking pressure of the by-pass valve (see Selection Chart, column 7).
- Clogging indicators are optional and always delivered detached from the filter.
- The filters listed in this chart are standard filters. Other designs available on request.

Dimensions

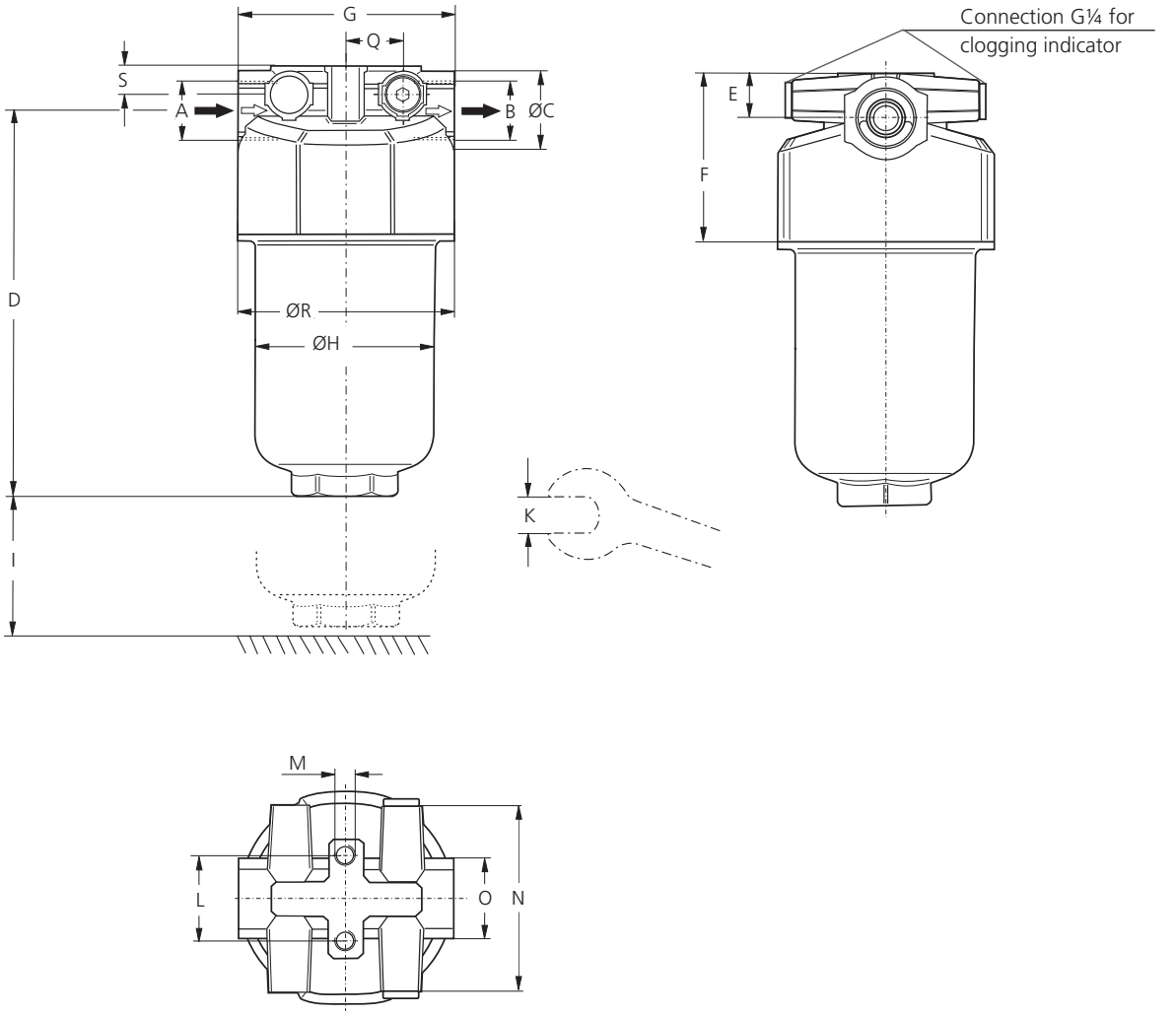

Measurements

Type	A	B	C	D	E	F	G	H	I	K	L	M Ø/depth	N	O	Q	R	S
LS 025	G¾	G¾	35	178	20	74	95	80	70	AF41	38,1	M8/15	82	AF36	25	95	12
LS 035	G¾	G¾	35	212	20	74	95	80	70	AF41	38,1	M8/15	82	AF36	25	95	12

Symbols

1

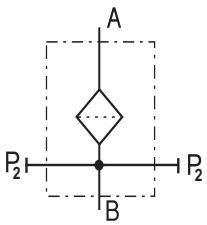

2

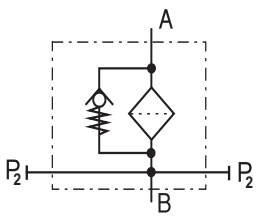

Spare Parts

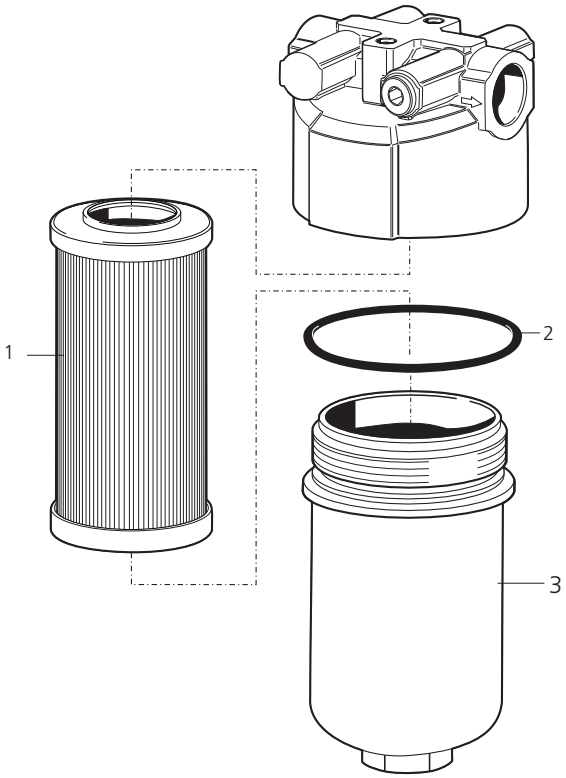

Pos.	Designation	Part No.
1	Filter element	s. Chart/col. 9
2	O-ring 82,14 x 3,53	N007.0824
3	Filter bowl LS 025	E 068.0101
3	Filter bowl LS 035	E 068.0102

The functions of the complete filters as well as the outstanding features of the filter elements assured by ARGO-HYTOS can only be guaranteed if original ARGO-HYTOS spare parts are used.

Quality Assurance

Quality management according to DIN EN ISO 9001

To ensure constant quality in production and operation, ARGO-HYTOS filter elements undergo strict controls and tests according to the following ISO standards:

ISO 2941 Verification of collapse/burst pressure rating
ISO 2942 Verification of fabrication integrity (Bubble Point Test)
ISO 2943 Verification of material compatibility with fluids
ISO 3968 Evaluation of pressure drop versus flow characteristics
ISO 16889 Multi-Pass-Test (evaluation of filter fineness and dirt-holding capacity)
ISO 23181 Determination of resistance to flow fatigue using high viscosity fluid

Various quality controls during the production process guarantee the leakfree function and solidity of our filters.

Illustrations may sometimes differ from the original. ARGO-HYTOS is not responsible for any unintentional mistake in this specification sheet.