Suction Filters

ES 134 · ES 144

Tank top mounting · Connection up to SAE 1½ · Nominal flow rate up to 130 l/min

Suction Filters ES 144

Description

Application

To be installed in the suction line of the pumps of hydraulic systems resp. upstream of the charge pumps of hydrostatic drives.

Performance features

Protection against wear:
By means of filter elements that, in full-flow filtration, meet even the highest demands regarding cleanliness classes.

Protection against malfunction:
By means of full-flow filtration in the system return, the pumps above all are protected from dirt particles remaining in the system after assembly, repairs, or which are generated by wear or enter the system from outside.

Special features

- By-pass valve:
  The location close to the suction inlet prevents dirt particles retained by the filter element from entering into the clean oil side.
- Filter element locking valve:
  Ensures that dirt accumulated in the filter element is removed together with the element and cannot return to the tank.
- Foot valve:
  When the screw-on cap is removed for maintenance, the foot valve closes automatically. This makes it possible to service the filter even if it is submerged below the oil level in a full tank.

Filter elements

Flow direction from centre to outside. The star-shaped pleating of the filter material results in:

- large filter surfaces
- low pressure drop
- high dirt-holding capacities
- long service life

In filters with a magnetic system, the ferromagnetic particles in the fluid pass first through a strong magnetic field and are separated.

Filter maintenance

By using a clogging indicator the correct moment for maintenance is stated and guarantees the optimum utilization of the filter life.

Materials

Screw-on cap:	Polyester, GF reinforced
Filter head:	Aluminium alloy
Filter bowl:	Steel
Seals:	NBR (FPM on request)
Filter media:	Paper – cellulose web, impregnated with resin Stainless steel wire mesh (1.4301)

Accessories

Electrical and optical clogging indicators are available on request.
Dimensions and technical data see catalogue sheet 60.20.

Characteristics

Nominal flow rate

Up to 130 l/min (see Selection Chart, column 2)
The nominal flow rates indicated by ARGO-HYTOS are based on the following features:

- closed by-pass valve at $\nu \leq 200$ mm²/s
- element service life > 1000 operating hours at an average fluid contamination of 0,07 g per l/min flow volume
- flow velocity in the connection lines ≤ 1,5 m/s
  If units not equipped with a bypass valve are used in hydrostatic drives, the recommendations regarding their technical application given on catalogue sheet 10.310 should be observed.

Connection

Threaded ports according to ISO 228 or DIN 13 or SAE-flanges (3.000 psi).
Sizes see Selection Chart, column 6 (other port threads on request)

Filter fineness

30 µm(c) ... 60 µm(c)
β-values according to ISO 16889
(see Selection Chart, column 4 and diagram Dx)

Dirt-holding capacity

Values in g test dust ISO MTD according to ISO 16889
(see Selection Chart, column 5)

Hydraulic fluids

Mineral oil and biodegradable fluids
(HEES and HETG, see info-sheet 00.20).

Temperature range

-30 °C ... +100 °C (temporary -40 °C ... +120 °C)

Viscosity at nominal flow rate

- at operating temperature: $\nu < 60$ mm²/s
- start-up viscosity:
  Determine ν_{max}, observing the permissible pressure at the pump inlet according to diagram D; determine Δp as a function of the viscosity (take pressure loss in connection lines into account!)
- at initial operation of units equipped with a bypass valve:
  The recommended starting viscosity can be read from the diagram D (pressure drop as a function of the kinematic viscosity) as follows: Find the 70 % Δp of the cracking pressure of the by-pass valve on the vertical axis. Draw a horizontal line so that it intersects the Δp curve at a point. Read this point on the horizontal axis for the viscosity.

Mounting position

Vertical mounting to be preferred, suction opening pointing downwards, versions equipped with foot valve for horizontal mounting also.

Δp-curves for complete filters in Selection Chart, column 3

D1 Pressure drop as a function of the **flow volume** at ν = 35 mm²/s (0 = casing empty)

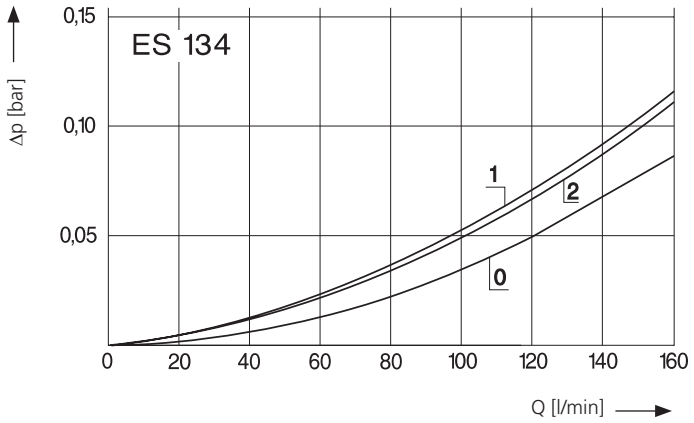

Pressure drop as a function of the **kinematic viscosity** at nominal flow

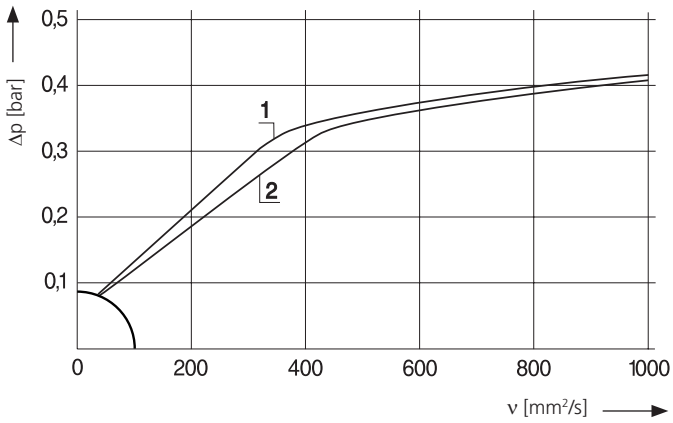

D2 Pressure drop as a function of the **flow volume** at ν = 35 mm²/s (0 = casing empty)

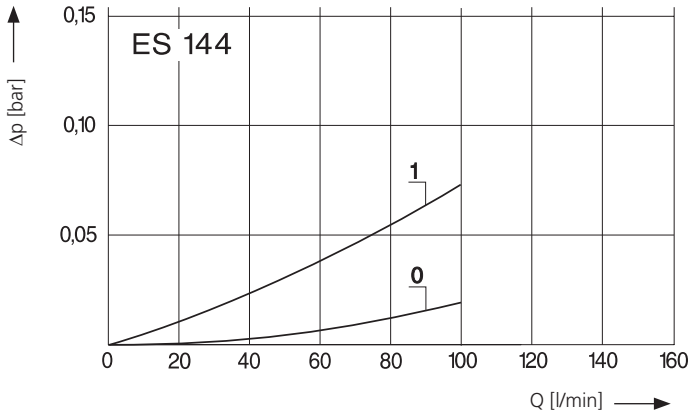

Pressure drop as a function of the **kinematic viscosity** at nominal flow

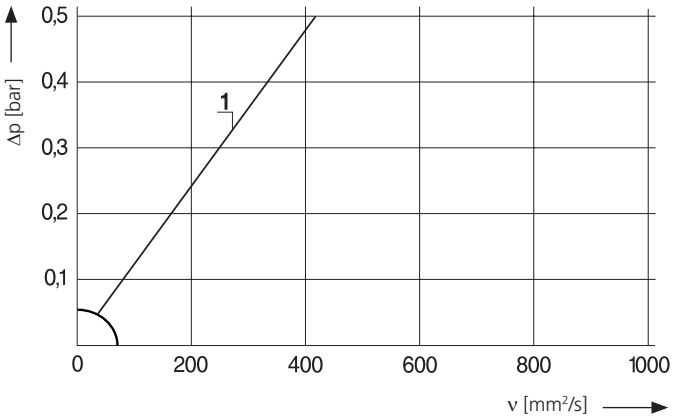

Filter fineness curves in Selection Chart, column 4

Dx Filtration ratio β as a function of particle size x obtained by the Multi-Pass-Test according to ISO 16889

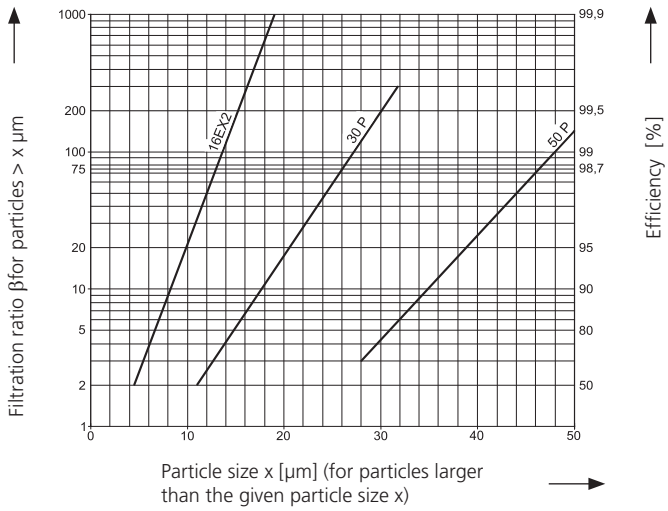

The abbreviations represent the following β-values resp. finenesses:

For EXAPOR®MAX 2 and Paper elements:

16EX2 = $\overline{\beta}_{16(c)}$ = 200 EXAPOR®MAX 2
30P = $\overline{\beta}_{30\,(c)}$ = 200 Paper
50P = $\overline{\beta}_{50\,(c)}$ = 200 Paper

Based on the structure of the filter media of the 30 P and 50 P paper elements, deviations from the printed curves are quite probable.

For screen elements:

40S = screen material with mesh size 40 µm
60S = screen material with mesh size 60 µm
100S = screen material with mesh size 100 µm

Tolerances for mesh size according to DIN 4189.

For special applications, finenesses differing from these curves are also available by using special composed filter material.

Selection Chart

Part. No.	Nominal flow rate	Pressure drop see diagram **D**/curve no.	Filter fineness see Diagr. **Dx**	Dirt-holding capacity Filter surface in ( )	Connection B	Cracking pressure of by-pass	Foot valve	Symbol	Replacement filter element Part No.	Weight	Remarks
	l/min			g		bar				kg	
1	2	3	4	5	6	7	8	9	10	11	12
ES 134-0501	130	**D1**/1	40S	(1540 cm²)	SAE 1½	-0,25	•	6	S2.0920-05	3,0	with magnetic system
ES 134-0001	130	**D1**/2	60S	(1540 cm²)	SAE 1½	-0,25	•	6	S2.0920-10	3,0	with magnetic system
ES 144-6110	70[1]	**D2**/1	30P	34	2 x G1 + G1¼	-	-	1	P2.0933-01	3,5	-

All filters are delivered with a plugged clogging indicator connection G¼. As clogging indicators either manometers or vacuum switches can be used.
Optional extension pipes adapt the filter length to various tank depths. For ordering of accessories please use the below mentioned codes.

Order example: The filter ES 144-6110 has to be supplied with an extension pipe (EV) for a mounting depth of 400 mm.

Order description: **ES 144-6110 / EV 400**

Part No. (Basic unit)

Extension pipe 2 (2 lengths are available)

EV = 400 / 500 mm (see section dimensions and measurements)

For the appropriate clogging indicator see catalogue sheet 60.20.

Remarks:

- The start of the red area respectively the actuating pressure of the vacuum switch has always to be higher than the cracking pressure of the by-pass valve (see Selection Chart, column 7).
- Clogging indicators are optional and always delivered detached from the filter.
- The filters listed in this chart are standard filters. Other designs available on request.

[1] Those values apply when used in hydrostatic drives and instructions in catalogue sheet 10.310 have to be observed.
[2] For designs without foot valve

Dimensions

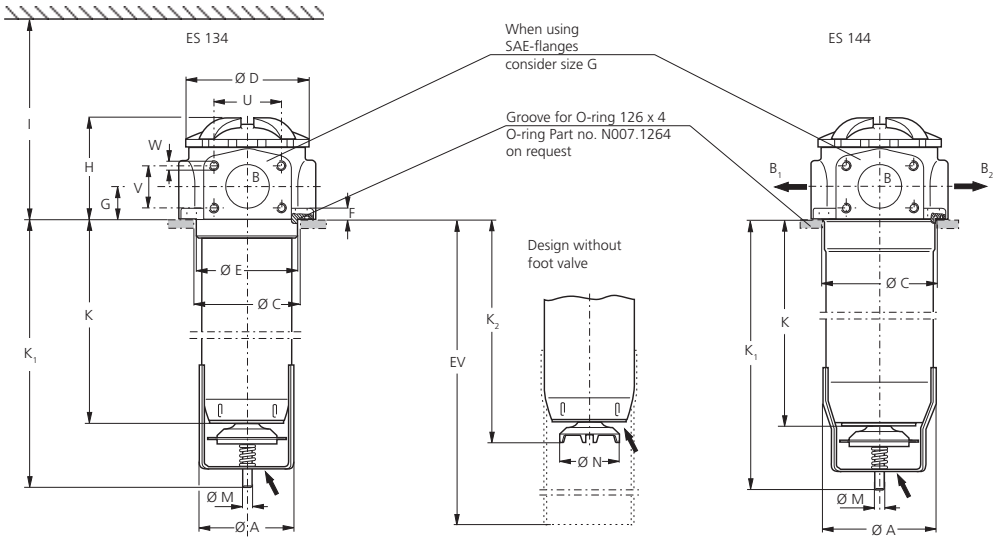

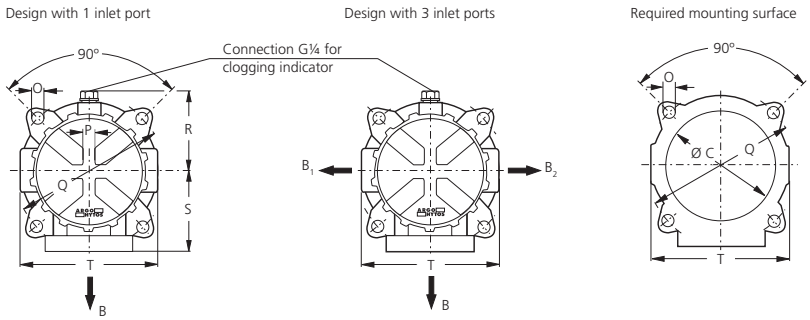

For calculation of dimension EV see selection chart

Measurements

Type	A	B	B_1	B_2	C min./max.	D	E	F	G	H	I	K	K_1	K_2	L	M	N
ES 134	100	SAE1½	-	-	111/121	126,5	110	12	32	106	400	198	256	218	-	10	62,5
ES 144	115	G1¼	G1	G1	119/221	126,5	-	12	32	106	525	305	364	325	-	10	62,5

Type	O	P	Q	R	S	T	U	V	W
ES 134	11,5	13	165	81	82	144	69,8	35,7	M12
ES 144	11,5	13	165	81	82	144	69,8	35,7	M12

Symbols

1 2 3 4 5 6

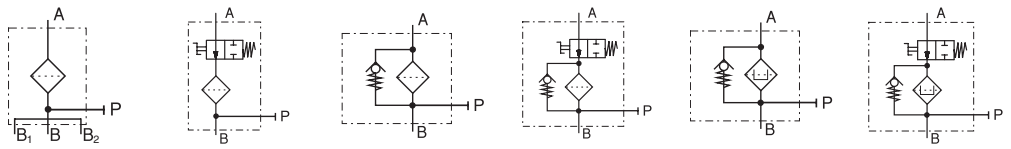

Spare Parts

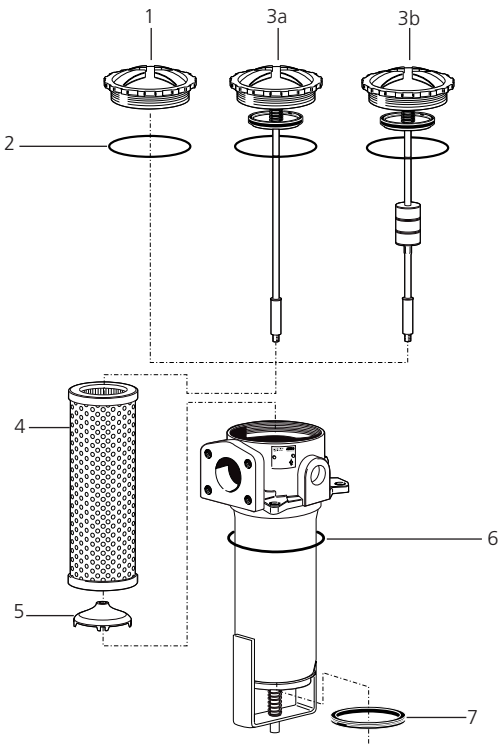

Pos.	Designation	Part No.
1	Screw-on cap with Pos. 2	ES 074.1212
2	O-ring 100 x 4	N007.1004
3a	Screw-on cap with Pos. 2 for ES 134 (without by-pass) for ES 144 (without by-pass)	 ES 074.1213 ES 094.1212
3b	Screw-on cap with Pos. 2 including magnetic system for ES 134 (with by-pass)	 ES 074.1205
4	Filter element	s. Chart / col. 10
5	Valve cone	ES 074.0202
6	O-ring 126 x 4 *	N007.1264
7	Rubber ring	N042.7401

* not included in basic equipment

The functions of the complete filters as well as the outstanding features of the filter elements assured by ARGO-HYTOS can only be guaranteed if original ARGO-HYTOS spare parts are used.

Quality Assurance

Quality management according to DIN EN ISO 9001

To ensure constant quality in production and operation, ARGO-HYTOS filter elements undergo strict controls and tests according to the following ISO standards:

ISO 2941 Verification of collapse/burst pressure rating
ISO 2942 Verification of fabrication integrity (Bubble Point Test)
ISO 2943 Verification of material compatibility with fluids
ISO 3968 Evaluation of pressure drop versus flow characteristics
ISO 16889 Multi-Pass-Test (evaluation of filter fineness and dirt-holding capacity)
ISO 23181 Determination of resistance to flow fatigue using high viscosity fluid

Various quality controls during the production process guarantee the leakfree function and solidity of our filters.

Illustrations may sometimes differ from the original. ARGO-HYTOS is not responsible for any unintentional mistake in this specification sheet.