ARGO HYTOS	**RPEK1-03 Modular Valve Assembly** D_n 03 • p_{max} 250 bar (3626 PSI) • Q_{max} 60 l/min (15.8 GPM)	**RPEK1-03/B**	**HA 4057** **12/2011**

- **Compact modular valve system assembly**
- **Easy to build complex circuits**
- **The possibility of subsequent rebuilding or extending the valve assembly**
- **High variability of functional options**

Functional Description

Modular assembly blocks are designed for the control of one or more hydraulic circuits, used in open hydraulic circuits. The high variability of the modular set design allows its wide use in the construction of lifting and handling equipment, machine tools and also in the field of mobile technique.
The base of the modular set is the body of the section distributor RPEK1-03. The bodies are manufactured in more several variants, which enable horizontal and vertical assembly (see RPEK1-03 directional valve data sheet HA 4027).
Channels P, T run through all horizontal sections. Inlet flow is 60 L/min nominal, sectional flow is limited with performance of RPEK directional valve 20 L/min (5.28 GPM) nominal.
Channel A, B, which run through the upper surface of the distributor body are provided with threads G1/4, or SAE6 - 9/16-18 UNF, all measuring ports are G1/4 or SAE4 -7/16-20 UNF Unthreaded outlets on the upper or side ground surface of the body are prepared for assembly.
Pressure and flow supply can be provided on the face side by a inlet P, T plate / block or in the centre of the assembled block using a central plate with radial ports of channels P, T. Furthermore, the block can be provided with a built-in pressure relief valve, which protects channel P against overloading, and the solenoid controlled valve that allows channels P-T connection thus relieving the source of the pressure fluid to tank. The supply block with the proportional distributor is used for the flow regulation in the “P” channel. Combination of 3 way pressure compensator and proportional valve allows to cave constant regulated flow independent of load.
Vertical assembly allows installation of valves into channels A, B. In vertical stacking assembly is possible to mount throttle valves, or Pilot operated check valves, and secundar pressure relief valves,
Horizontal direction blocks, plates and bodies of distributors are connected into one unit using 3 screws / bolts and 4 bolts in the vertical direction. All connected plates are sealed.
Two fastening angles serve to mount the complete block to the base by screwing them to the face surfaces, or by using threads M6 at the bottom side of the plates and blocks.
A modular set allows horizontal assembly up to eight sections or up to sixteen sections when the centre plate is used for feeding and the blocks are grouped from both sides. It is possible to group up to four blocks vertically.
In cases of more complicated block assemblies we recommend to first create a hydraulic circuit diagram.

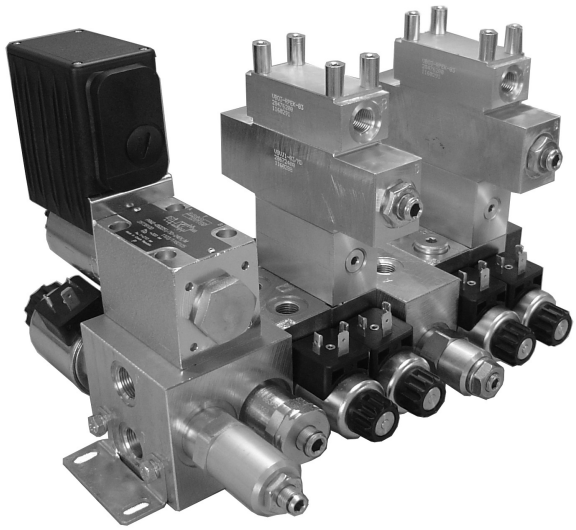

Horizontal and Vertical Assembly Ilustrative Figure

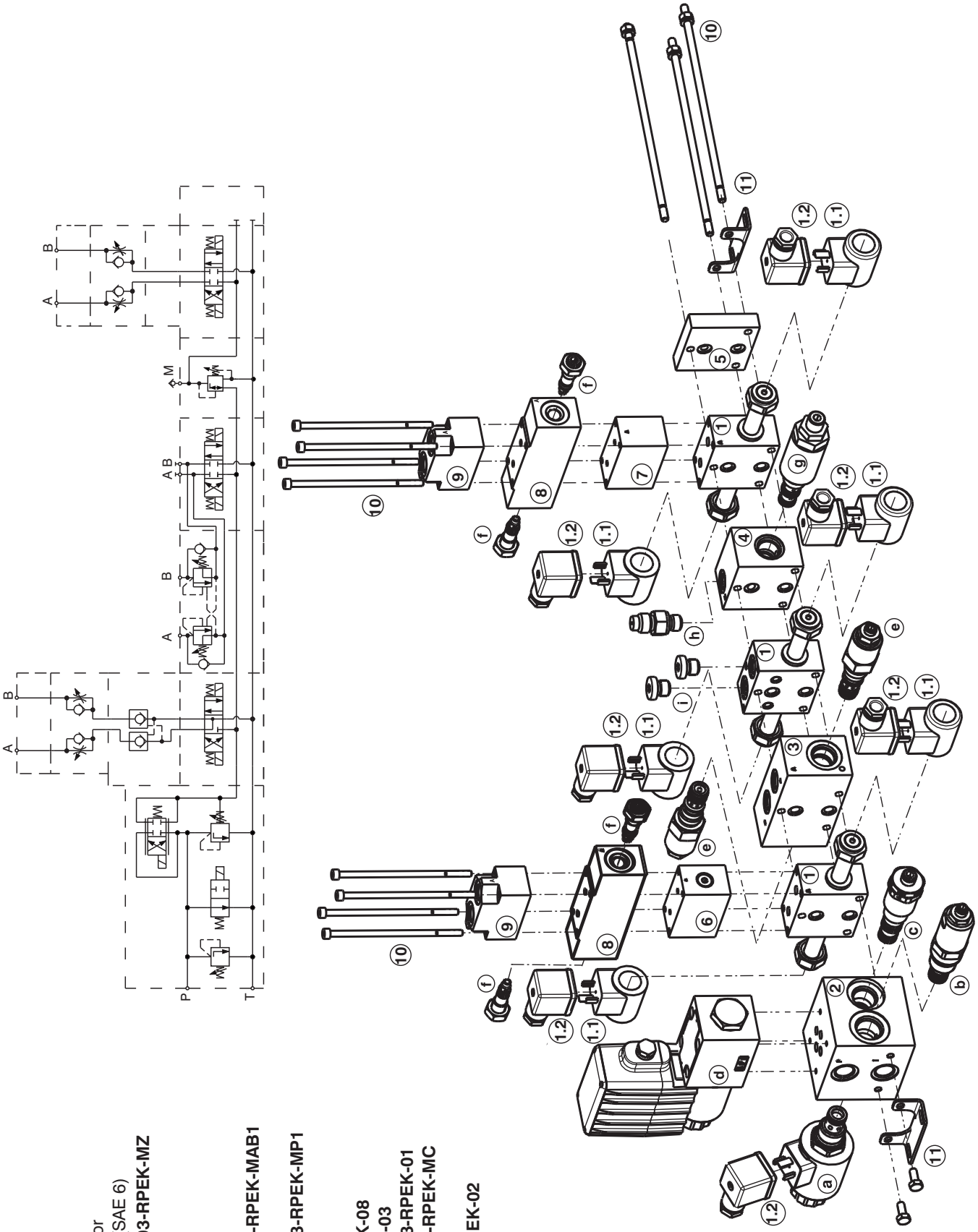

1. **RPEK**
   1.1. Coils
   1.2. Electrical connector
   i) Pressure plug G1/4 (SAE 6)
2. **Inlet P,T plates HB03-RPEK-MZ**
   a) SD2E-B2
   b) SR1A-B2
   c) TV2-063
   d) PRM2-06
3. **Sandwich plate HB03-RPEK-MAB1**
   e) SOPA-Q3
4. **Sandwich plate HB03-RPEK-MP1**
   g) SP2A-A3
   h) Minimes
5. **End plate HB03-RPEK-08**
6. **PO check valve VJR5-03**
7. **Extension plate VB-03-RPEK-01**
8. **Sandwich plate VB03-RPEK-MC**
   f) VSV2
9. **Cover plate VB03-RPEK-02**
10. **Kit studs**
11. **Kit**

CONTENT

1. General description ..... 1 - 3
2. Directional Control Valve RPEK1-03 ..... 4 - 11
3. Pilot Operated Check Valves for vertical assembly ..... 12 - 14
4. Connecting threads overview 15
5. Assembly Guidelines – Horizontal Plates 16
5.1 Overview of components for horizontal assembly 16
5.2 Inlet P,T plates with valves ..... 17 - 20
5.3 Centre P,T plates ..... 21 - 22
5.4 Inlet P,T and End plates without valves ..... 23 - 24
5.5 Horizontal sandwich plates with valves ..... 25 - 31
5.6 Accesories ..... 32 - 33
6. Assembly Guidelines – Vertical Plates 34
6.1 Overview of components for vertical assembly 34
6.2 Extension plate 35
6.3 Pilot Operated Check Valve 36
6.4 Vertical sandwich plate with valves ..... 37 - 39
6.5 Cover plate - A,B ports ..... 40 - 41
6.6 Measuring plate - A,B ports 42
6.7 Accesories 42

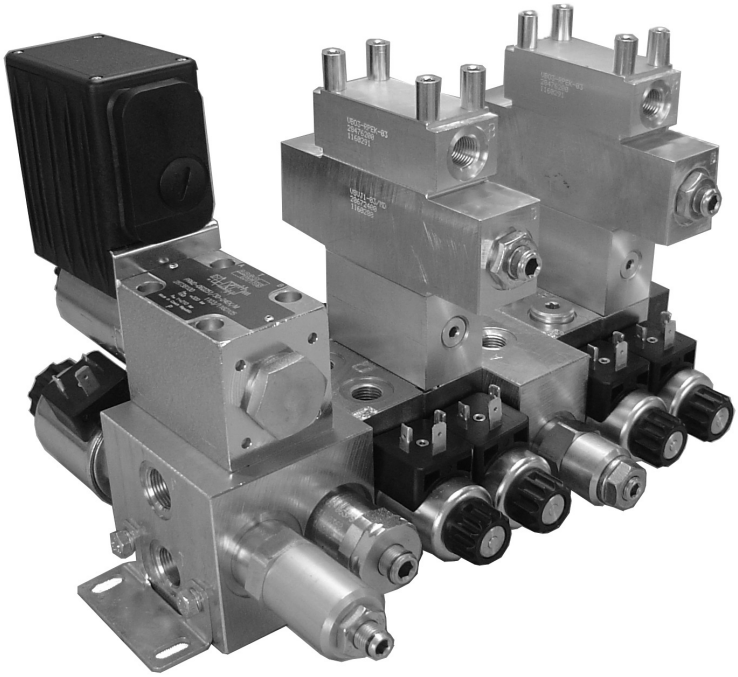

ARGO HYTOS

Directional Control Valves Solenoid Operated

RPEK1-03

Size 03 • p_{max} up to 250 bar (3625 PSI) • Q_{max} up to 20 L/min (5.28 GPM)

HA 4027
11/2011

Replaces
HA 4027 12/2007

- **4/3-, 4/2 way directional control valves with solenoid control**
- **Solenoids can be turned around their axis to any position**
- **Push button manual override**
- **Possibility of vertical and horizontal assembly, see data sheet HA 4057**

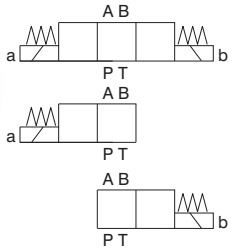

Functional Description

Distributors of the RPEK1-03 type are the basic elements for building blocks through horizontal and vertical assembly. This catalogue describes the preparation of the main unit, made up of two to eight distributors, by horizontal assembly. The distributors controlling the direction of the working fluid's flow to the individual appliances share common channels P and T. During the circuit design it is always necessary to check if the flow through the common channels covers the consumption of all appliances in all phases of the hydraulic equipment working cycle. Channels A, B outputs at the upper surface of the body are provided with threads G1/4 (type G), or SAE 9/16-18 (type S), or are prepared for vertical assembly (type O) – i.e. brought out onto a ground surface. Channels P, T, A, B outlets on the side surfaces of the body are prepared for horizontal assembly – i.e. brought out onto a ground surfaces or provided with The standard design of the emergency control may be additionally fitted with a pushbutton with a rubber cover. a sealing ring recess.
The individual distributor bodies are connected into a compact block using three bolts. Fastening angles serve to mount the block to the base with four screws.
An assembled block feed is provided by a plate with connecting threads G3/8 in channels P, T. It is also possible to use plate with a built-in pressure relief valve to regulate the maximum pressure in the circuit.

Use data sheet No. HA 5027 to create more complex assemblies with the use of the horizontal and vertical assembly, while also using additional building elements.

The RPEK1-03 directional control valves consist of cast iron housing (1), control spool (5) with two centering springs (4) and operating solenoids (2, 3).
The three-position directional valves are fitted with two solenoids, two-position directional valves have either one solenoid.
*The operating solenoids are DC solenoids supplied through connectors A, B (6, 7). For AC supply the solenoids are provided with rectifiers, which are integrated directly into the connectors A, B (6, 7). Tthe connectors can be turned by 90° around . By loosening the nut (8), the solenoid can be turned around its axis up to 360°.
In the case of solenoid malfunction or power failure, the spool of the valve can be repositioned by manual override (9), provided the pressure in the T-port does not exceed 25 bar.The standard design of the emergency control may be additionally fitted with a pushbutton with a rubber cover.
The basic surface treatment of the valve housing (1) is phosphate coated and the solenoids (2, 3) are zinc coated.
*Magnet coils are not included in the valve supply. The coil types selected by the customer must be ordered separately.

Type of connection "O"

Type of connection "G", "S"

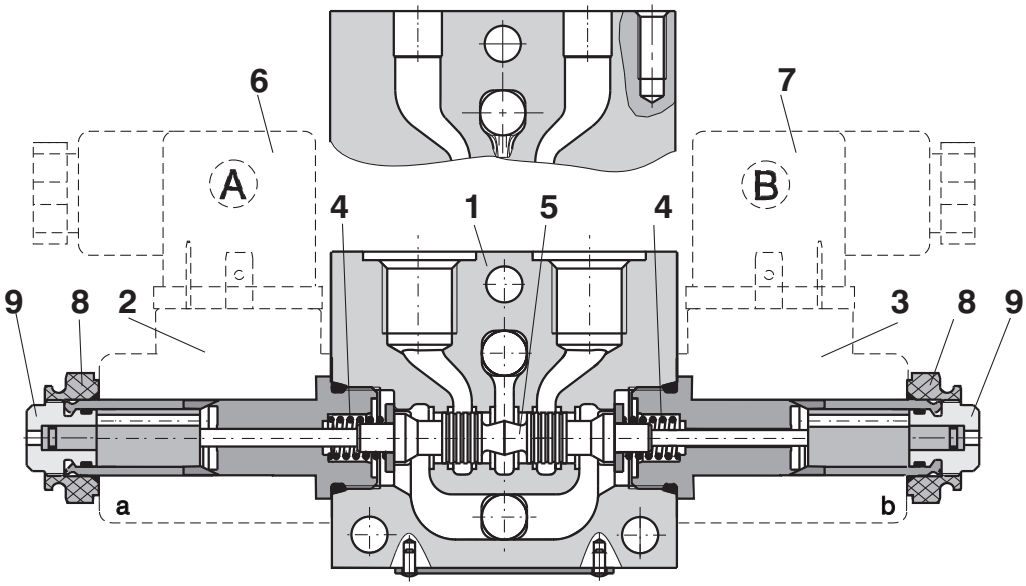

Ordering Code

RPEK1-03 □□□ / □□□

Solenoid Operated Directional Control Valve

Nominal size

Type of connection
G1/4 **G**
SAE 9/16-18 **S**
without thread **O**

Number of valve positions
two positions **2**
three positions **3**

Functional symbols
see the table functional symbols

Seals
no designation NBR
V FPM (Viton)

Design form
no designation standard
P1 through channels P, T; inlets A, B with sealing rings
Z1 one side inlets of channels P, T with sealing rings
Z3 one side inlets of channels P, T, A, B with sealing rings

Manual override *
no designation standard

*The standard design of the manual override may be additionally fitted with a pushbutton with a rubber cover (N2).

Note: solenoid coil, electrical connector and manual override (N2) **is not supplied as mounted on**, must be ordered separately (see ordering number on page 10, 11)

Technical Data

Nominal size		03	
Maximum flow	l/min (GPM)	see p-Q characteristics	
Maximum operating pressure at ports P, A, B	bar (PSI)	250 (3625)	
Maximum operating pressure at port T	bar (PSI)	210 (3045)	
Pressure drop	bar (PSI)	see Δp-Q characteristics	
Hydraulic fluid		Hydraulic oils of power classes (HL, HLP) to DIN 51 524	
Fluid temperature range NBR	°C (°F)	-30 ... +80 (-22 ...+176)	
Fluid temperature range FPM (Viton)	°C (°F)	-20 ... +80 (-4 .... +176)	
Ambient temperature, max.	°C (°F)	up to +50 (+122)	
Viscosity range	mm^2/s (SUS)	20 ... 400 (98 .... 1840)	
Maximum degree of fluid contamination		Class 21/18/15 to ISO 4406 (2006)	
Maximum allowable voltage variation	%	AC: ± 10	DC: ± 10
Maximum switching frequency	1/h	15 000	
Switching time, ON; at ν = 32 mm^2/s	ms	30 ... 50	
Switching time, OFF; at ν = 32 mm^2/s	ms	AC: 70 ... 100	DC: 30 ... 50
Duty cycle	%	100	
Service life	cycles	10^7	
Enclosure type to EN 60 529		see page 10	
Weight - valve with 1 solenoid - valve with 2 solenoid	kg (lb)	0.90 (1.98) 1,05 (2.32)	
Mounting position		optional	

Functional Symbols

Designation	Symbol	Interposition	Designation	Symbol	Interposition
Z11	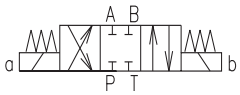	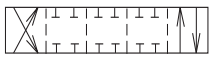	R21	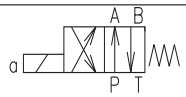	
C11	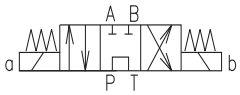	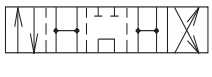	Y51	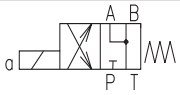	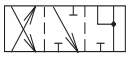
H11		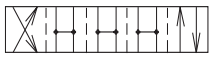	C51	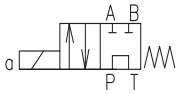	
Y11		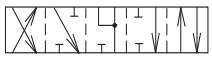	Z51	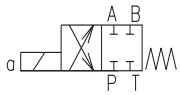	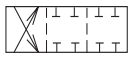
R11	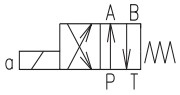	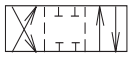	H11	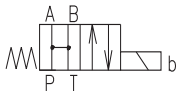	

p-Q Characteristic

Measured at ν = 32 mm^2/s (156 SUS)

Operating limits for maximum hydraulic power transferred by the directional valve.

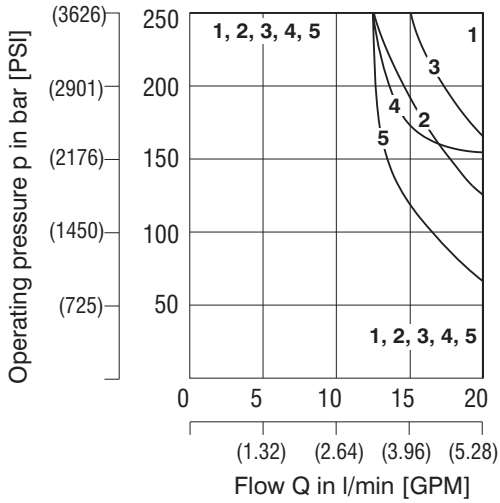

Z11	Z51	R11	R21	C11	C51	H11	Y11	Y51
1	1	1	5	2	2	3	4	4

Δp-Q Characteristic

Measured at ν = 32 mm^2/s (156 SUS)

Pressure drop Δp ralated to flow rate.

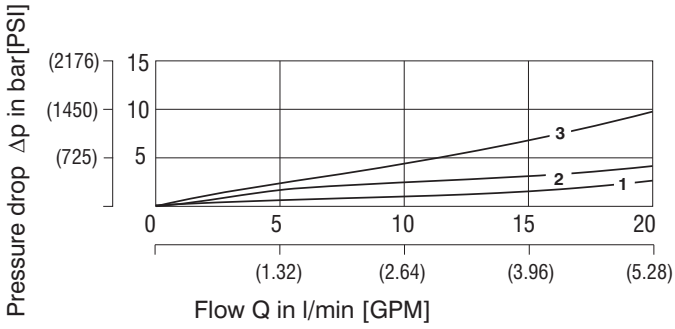

	Z11	C11	H11	Y11	R11	R21	Y51	C51	Z51
P-A	1	3	1	1	2	2		3	
P-B	1	3	1	1	2	2	1		1
A-T	1	3	1	1	2	2	1		1
B-T	1	3	1	1	2	2		3	
P-T		2	2					2	

Valve Dimensions Standard body version "G" , "S"

Dimensions in millimeters (inches)

	G	S
THREAD	G1/4	SAE6 - 9/16-18UNF
∅D [mm]	∅20,9H13	∅ 25 $^{+0,5}$
∅D [in]	0.823	0.984 $^{+0.020}$
A [mm (in)]	1(0.039)	0,5 (0.020)

Valve with two solenoids

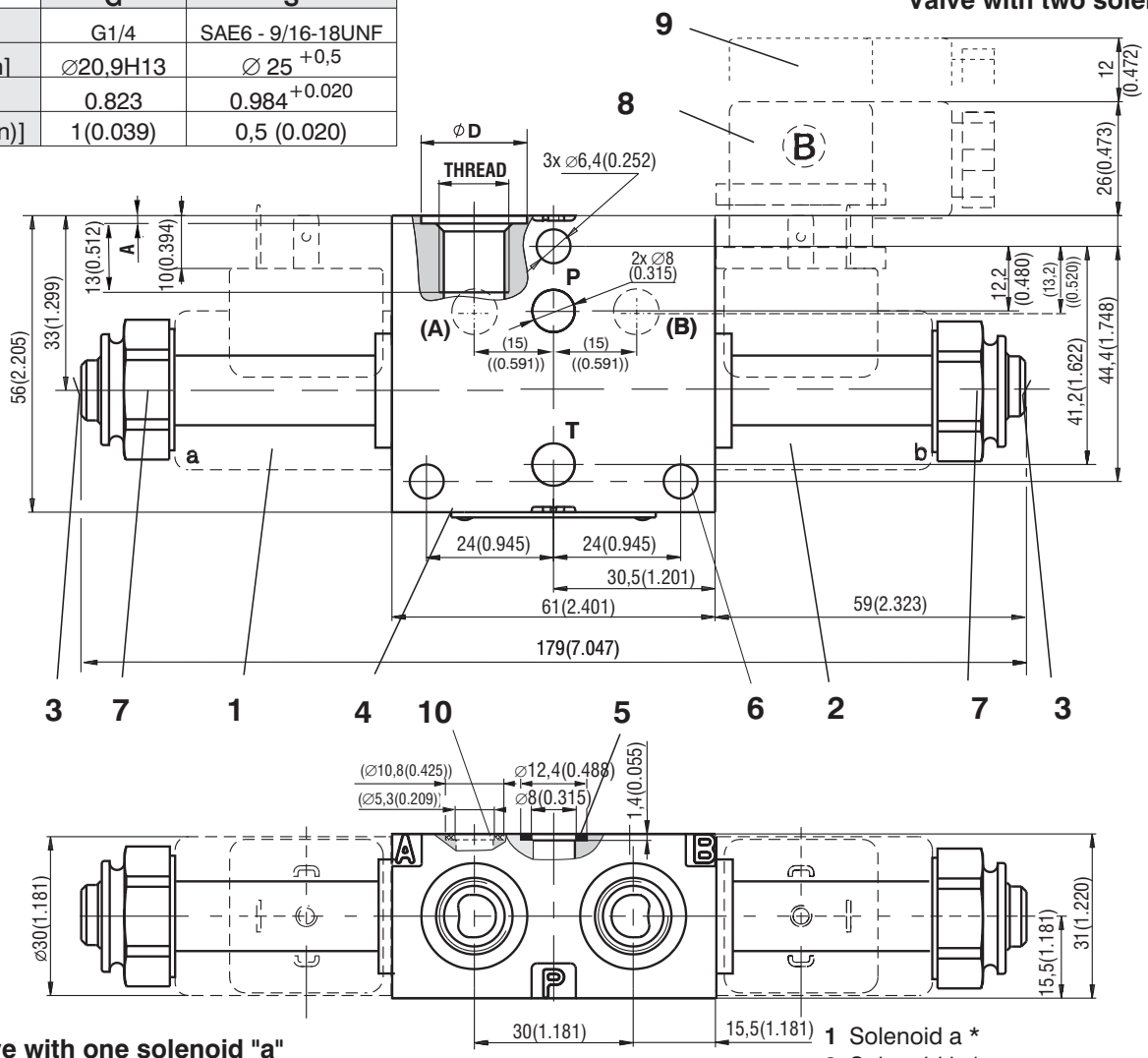

Valve with one solenoid "a"
Functional symbols R11, R21, Y51, C51, Z51

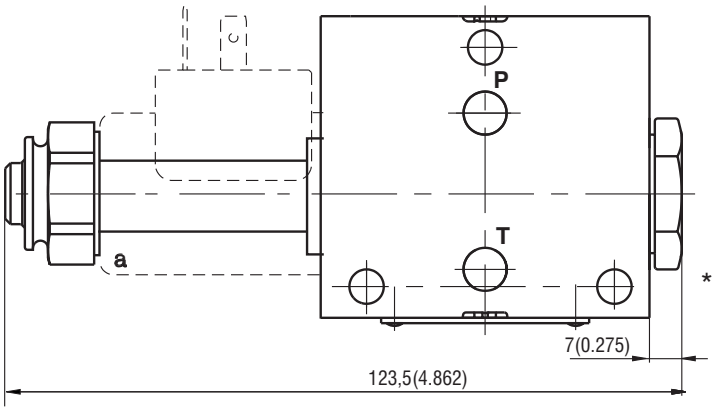

1 Solenoid a *
2 Solenoid b *
3 Manual override
4 Name plate
5 Square ring 9,25 x 1,68 (2 ks.) supplied with valve
6 3 mounting holes
7 Retaining nut of the solenoid
8 Electrical connector, EN 1745301-803
9 Space required to remove connector
10 Outlets A/B are only at the versions P1, Z1; Z3, Seal 7,65x1,68

* must be purchased separately (see page 7)

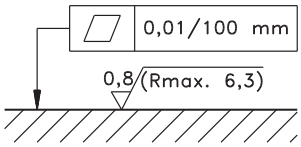

Required surface finish of interface

Valve with one solenoid "b"
Functional symbols H11

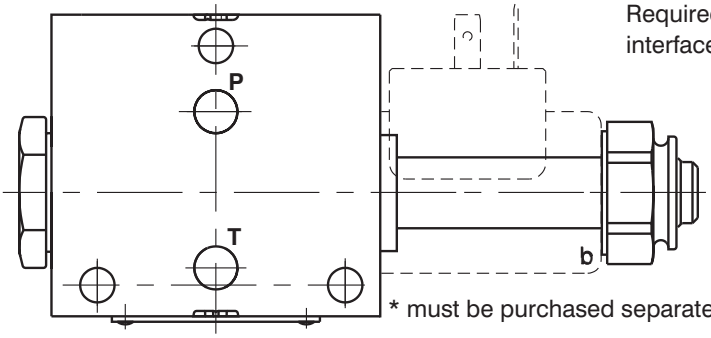

* must be purchased separately (see page 7)

Valve Dimensions Standard body version "O"

Dimensions in millimeters (inches)

Valve with two solenoids

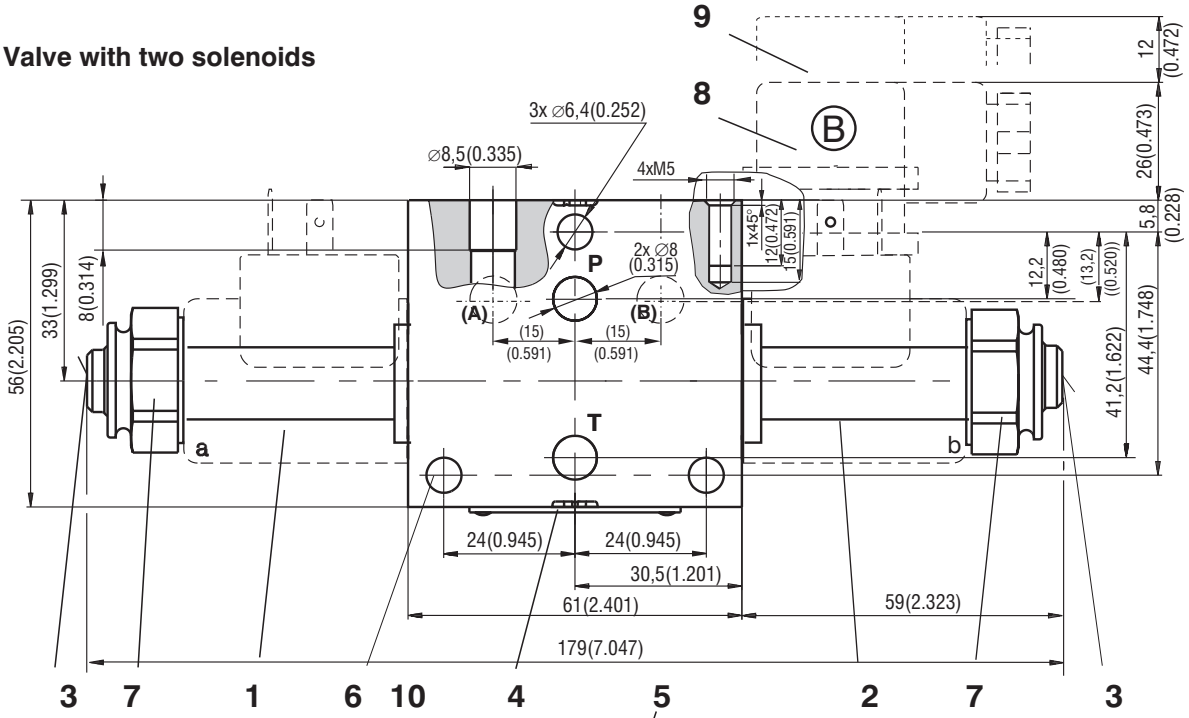

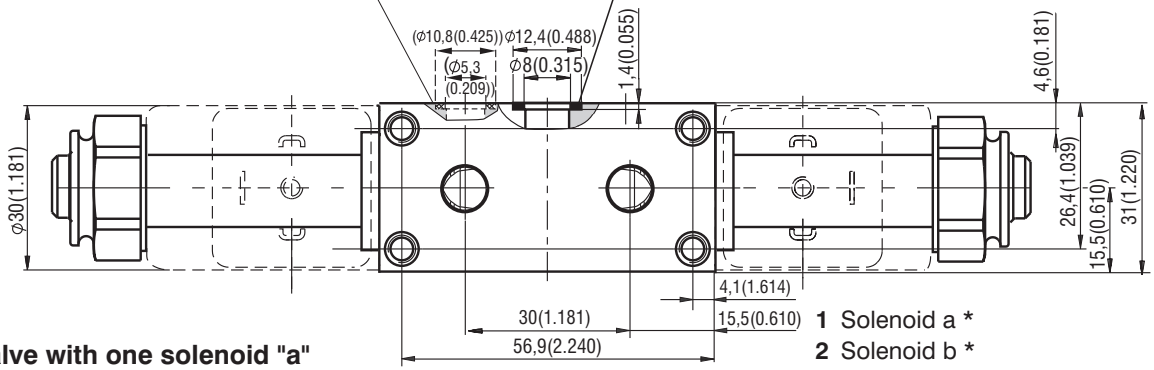

1 Solenoid a *
2 Solenoid b *
3 Manual override
4 Name plate
5 Square ring 9,25 x 1,68 (2 ks.) supplied with valve
6 3 mounting holes
7 Retaining nut of the solenoid
8 Electrical connector, EN 1745301-803
9 Space required to remove connector
10 Outlets A/B are only at the versions P1, Z3, Seal 7,65x1,68

* must be purchased separately (see page 7)

Valve with one solenoid "a"

Functional symbols R11, R21, Y51, C51, Z51

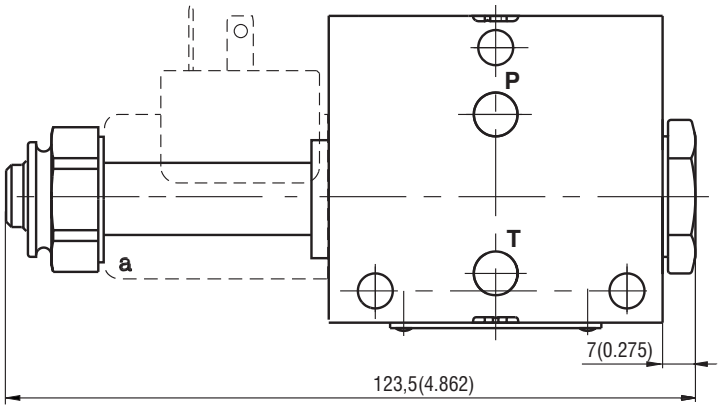

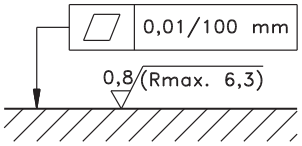

Required surface finish of interface

Valve with one solenoid "b"

Functional symbols H11

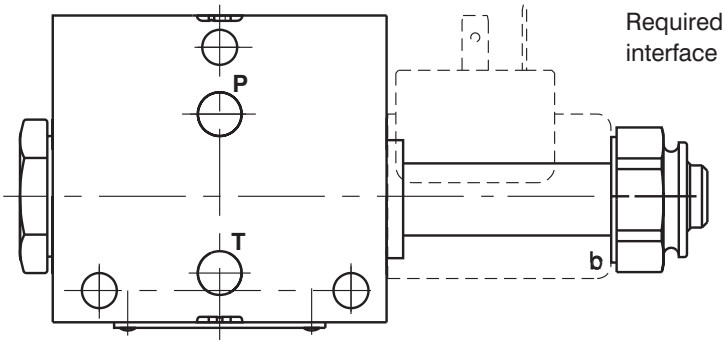

Design form "G" ("S"), "O"

P1 - "G"("S")

hrough channels P, T; outlets A, B with sealing rings

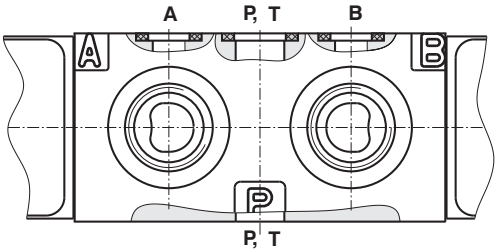

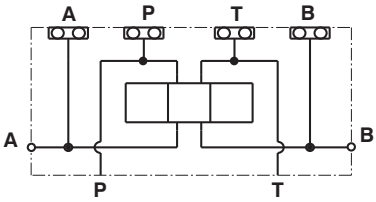

P1 - "O"

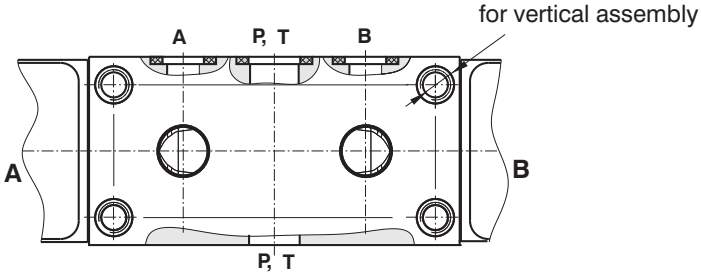

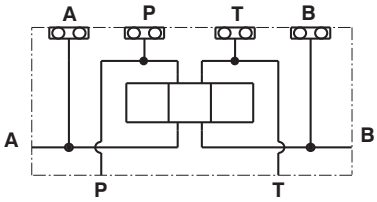

Z1 - "G"("S")

one side inlets of channels P, T with sealing rings (outlets A, B only on the upper surface)

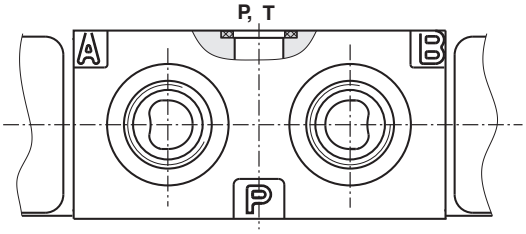

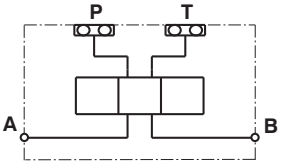

Z1 - "O"

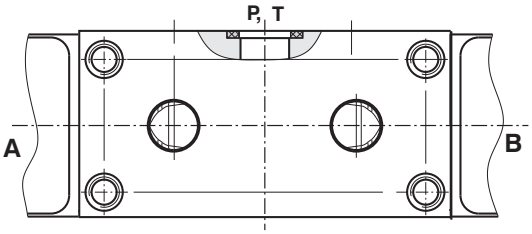

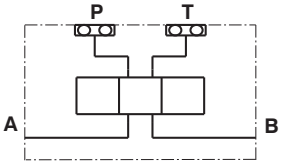

Z3 - "G"("S")

combination of options **Z1 a P1**

one side inlets of channels P, T, A, B with sealing rings

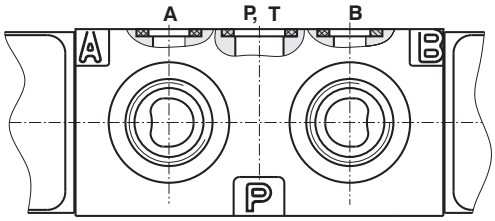

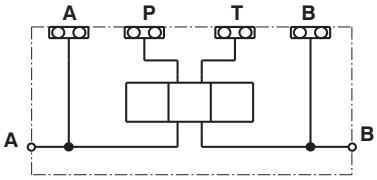

Z3 - "O"

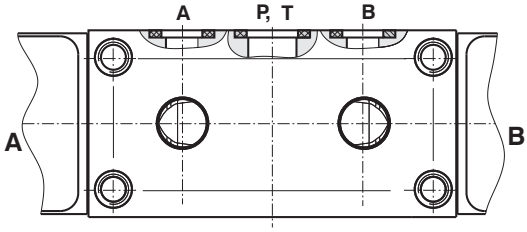

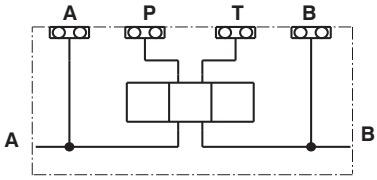

Spare Seal kit

Type	Dimensions, number			Ordering nr. **Z1**
	Sealing - ring	O-ring		
Standard	9,25 x 1,68 NBR 70 (2 ks.)	16 x 2 NBR 90 (2ks.)		15691300
Type	**Dimensions, number**			**Ordering nr. P1, Z3**
	Sealing - ring	O-ring	Sealing - ring	
Standard	9,25 x 1,68 NBR 70 (2 ks.)	16 x 2 NBR 90 (2 ks.)	7,65 x 1,68 (2 pcs.)	28839800
Viton	9,25 x 1,78 (2 pcs.)	16 x 2 (2 pcs.)	7,65 x 1,78 (2 pcs.)	28840100

Manual Override

Dimensions in millimeters (inches)

STANDARD	RUBBER BOOT		
NO DESIGNATION	**N2**	**Ordering number / Kit**	**29269100**

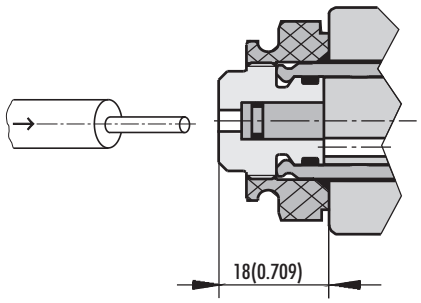

Standard model of the manual override.
Standard retaining nut of the solenoid.

KIT N2

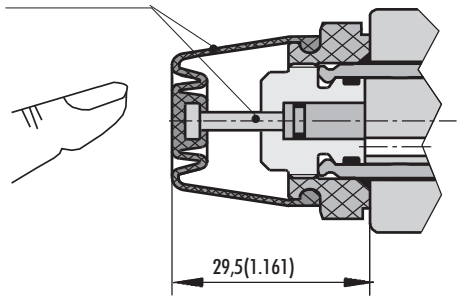

Manual override protected by rubber boot.
Kit must be purchased separately.

Dimensions of Coils C14

Dimensions in millimeters (inches)

Connector design

E1, E2
EN 175301-803-A

Protection degree IP65

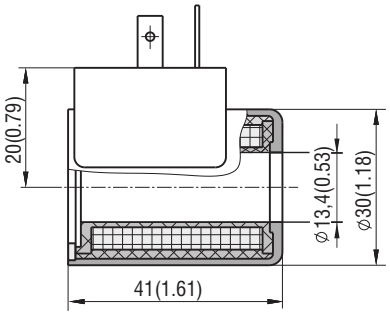

E3A, E4A
AMP Junior Timer

Protection degree IP65

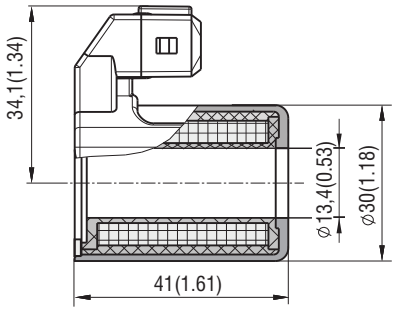

E12, E13
Deutsch DT04-2P

Protection degree IP67, IP69

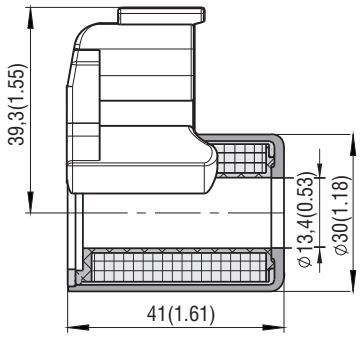

Coils C14B			Type code	Ordering number
Nominal voltage	**Nominal current**	**Connector**		
12 VDC	1,83 A	E1 - EN 175301-803-A	C14B-01200E1-6,55NA	16210300
24 VDC	0,92 A	E1 - EN 175301-803-A	C14B-02400E1-26,2NA	16210400
205 V DC*	0,08 A	E1 - EN 175301-803-A	C14B-20500E1-2476NA	16210500
12 VDC	1,83 A	E2 - E1 with quenching diode	C14B-01200E2-6,55NA	24101600
24 VDC	0,92 A	E2 - E1 with quenching diode	C14B-02400E2-26,2NA	24101800
12 VDC	1,83 A	E3A - AMP Junior Timer (2 pins; male)	C14B-01200E3A-6,55NA	28822500
24 VDC	0,92 A	E3A - AMP Junior Timer (2 pins; male)	C14B-02400E3A-26,2NA	28686400
12 VDC	1,83 A	E4A - E3A se zhášecí diodou	C14B-01200E4A-6,55NA	28822600
24 VDC	0,92 A	E4A - E3A se zhášecí diodou	C14B-02400E4A-26,2NA	28822400
12 VDC	1,83 A	E12 - Deutsch DT04-2P	C14B-01200E12-6,55NA	29268200
24 VDC	0,92 A	E12 - Deutsch DT04-2P	C14B-02400E12-26,2NA	29268900
12 VDC	1,83 A	E13 - E12 se zhášecí diodou	C14B-01200E13-6,55NA	29268800
24 VDC	0,92 A	E13 - E12 se zhášecí diodou	C14B-02400E13-26,2NA	29269000

Note:
* Coil version 205 are suitable for the rectified voltage of 230V /50Hz, Rectifier in coil included
Other designs available at request.

Spare Parts

1 Electrical connector
2 Solenoid coil - see coils table
3 Nut with seal
4 Seal kit

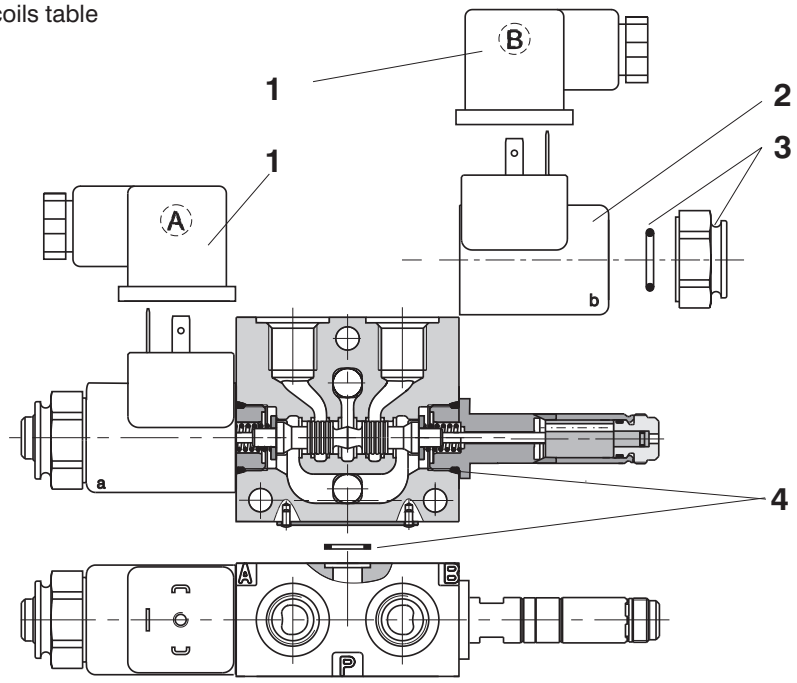

Solenoid retaining nut with seal

Type of the nut - Mu 3 Nm(2.21lbs-ft)	Seal ring	Ordering number
Standard nut	13 x 2	15691500
Manual Override N2		29269100

Electrical connector, EN 1745301-803

Type designation	Model	Max. input voltage	Connector A grey	Connector B black
			Ordering number	
K1	without rectifier - M16x1,5 bushing bore ∅ 6-8 mm (0.236 - 0.315 in)	230 V AC/DC	16202200	16202100
K2	without rectifier with LED and quenching diode M16x1,5 bushing bore ∅ 6-8 mm (0.236 - 0.315 in)	12...24 V DC	16202800	16202700
K3	with rectifier - M16x1,5 bushing bore ∅ 6-8 mm (0.236 - 0.315 in)	230 V AC	16202400	16202300
K4	with rectifier with LED and quenching diode - M16x1,5 bushing bore ∅ 6-8 mm (0.236 - 0.315 in)	230 V AC	16203000	16202900
K5	without rectifier - M16x1,5 bushing bore ∅ 4-6 mm (0.158 - 0.236 in)	230 V AC/DC	16202600	16202500

Caution

- When the distributor contains two electromagnets any of the two electromagnets can be switched on only after the other one switches off.
- Distributors with other interconnections than those shown in the catalogue can be supplied on request.
- The packaging foil can be recycled
- The transport base plate can be returned to the manufacturer.
- The mentioned data only serve to describe the product and in no case are to be understood in terms of law as guaranteed characteristics.

ARGO HYTOS

Pilot Operated Check Valves Sandwich Plates

VJR5-03/M

HA 5027
11/2011

Size 03 • p_{max} up to 250 bar (3625 PSI) • Q_{max} up to 20 l/min (5.28 GPM)

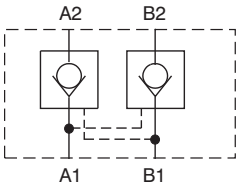

- **Sandwich plate design for use in vertical stacking assemblies**
- **3 models:**
  leakfree closure of both sides with check valves in lines A and B
  leakfree closure with check valve in line A
  leakfree closure in line B

Functional Description

A hydraulic lock serves to close tightly a hydraulic circuit under pressure. It provides a load against a pressure drop and secures a stable position of piston of the cylinder under pressure also for a longer period.
The valve consist of an aluminium body (1), one or two check valves (2), (3) and a control piston (4).
If a fluid is flowing in the direction from A1 (B1) into A2 (B2), a ball lifts (2)or (3), and the control piston (4) shifts at the same time to the right (left) and pushes out the ball (3) or (2) from the seat. This releases the connection B2 →B1 (A2→A1). If the pressure drops in channels A1 and B1 (e.g. when the distributor shifts to the centre position), the spring presses the ball springs (2) and (3) into the seats and the cylinder circuit is closed under pressure.
To ensure a tight seal of the spaces A2 and B2, the distributor with Y interconnection must be used, which, when in the centre position, connects both sides of the control piston (4) with the tank.

Without surface finish.

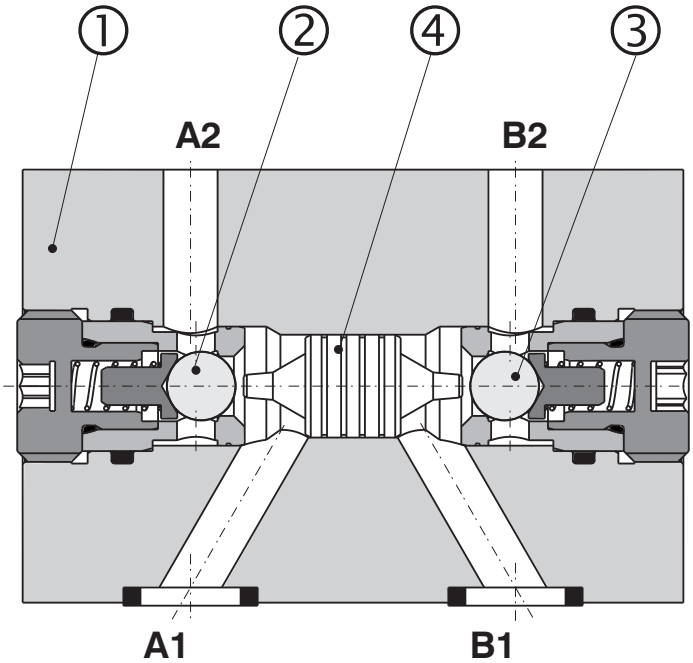

Ordering Code

VJR5-03/M □ □

Pilot Operated Check Valve Sandwich Plate

Nominal size

Modular design

A
B
C

Functional Symbols
check valve in line A*
check valve in line B*
check valves in lines A and B*
* see the table Functional symbols

no designation
V

Seals
NBR
FPM (Viton)

Functional Symbols

Arrangement of the check valves in the valve body

VJR5-03/MA

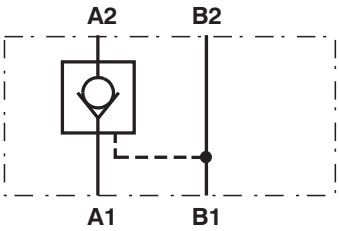

VJR5-03/MB

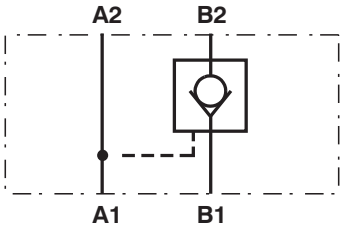

VJR5-03/MC

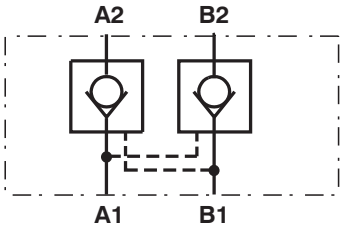

Technical Data

Nominal size		03
Maximum flow	L/min (GPM)	20 (5.28)
Maximum operating pressure	bar (PSI)	250 (3625)
Cracking pressure	bar (PSI)	0,25 (3.625)
Hydraulic fluid		Hydraulic oils of power classes (HL, HLP) to DIN 51524
Fluid temperature range (NBR)	°C (°F)	-30 ... +80 (-22 ...+176)
Fluid temperature range (Viton)	°C (°F)	-20 ... +80 (-4 .... +176)
Viscosity range	mm^2/s	20 ... 400 (98 .... 1840)
Maximum degree of fluid contamination		Class 21/18/15 to ISO 4406 (2006)
Area ratio (pilot piston / poppet)		3 : 1
Mounting position		optional
Weight	kg (lb)	0,2 (0.44)

Δp-Q Characteristics

Measured at ν = 32 mm²/s (156 SUS)

Pressure drop Δp related to flow rate.
Pressure loss with distributor **RPEK1-033/Y11**

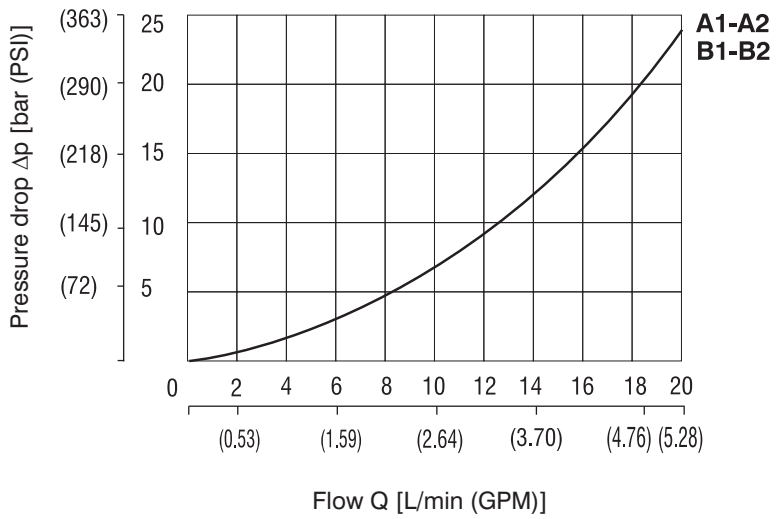

	Flow in direction
1	A1 → A2 (B1 → B2)
2	A2 → A1 (B2 → B1)

Valve Dimensions

Dimensions in millimeters (inches)

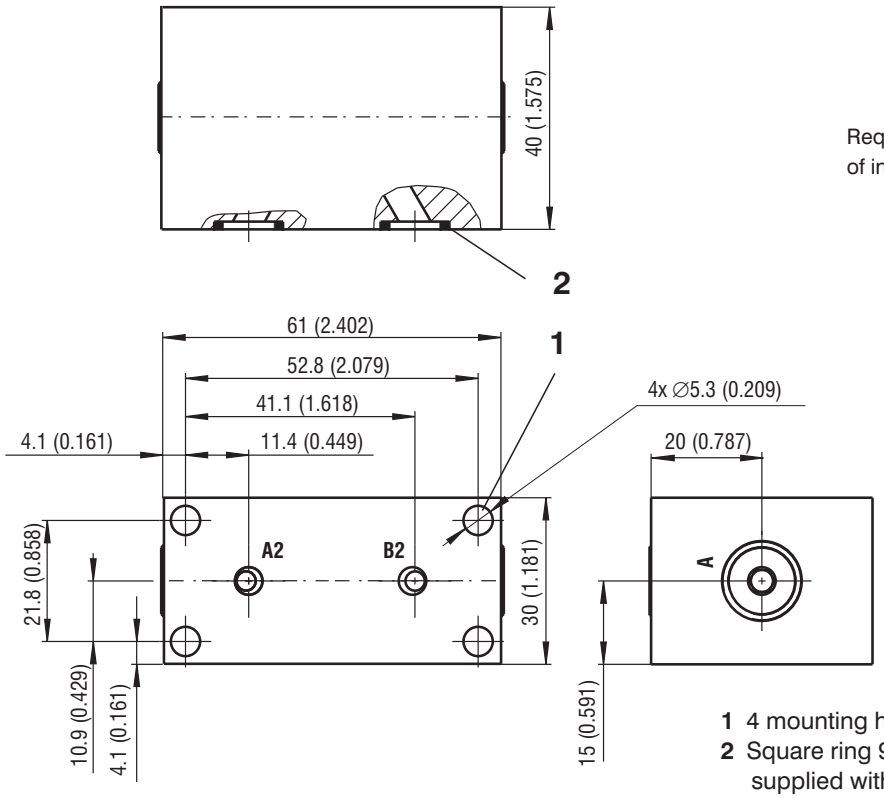

Required surface finish of interface

1 4 mounting holes
2 Square ring 9.25 x 1.68 (2 pcs.) supplied with valve

Spare Parts

Seal kit

Type	Dimensions, quantity		Ordering number
	Square ring	O-ring	
Standard NBR70	9,25 x 1,68 (2 pcs.)	4,47 x 1,78 (2 pcs.)	28407200
Viton	-	9,25 x 1,78 (2 pcs.)	28407300
		4,47 x 1,78 (2 pcs.)	

Threaded Chambers for the RPEK Kit Connecting

INLET/OUTLET PORTS FOR HORIZONTAL AND VERTICAL ASSEMBLY

G3/8 ..... P, T

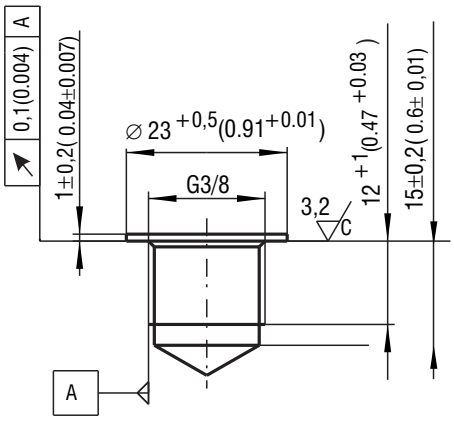

G1/4 ..... M, A, B

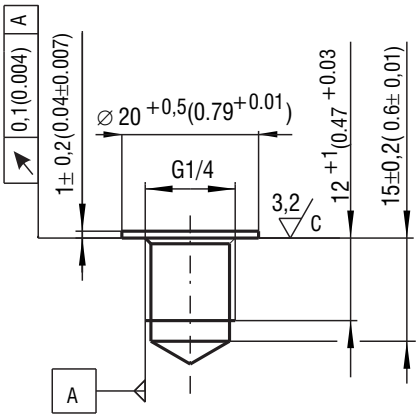

SAE8 - 3/4-16 UNF ..... P, T

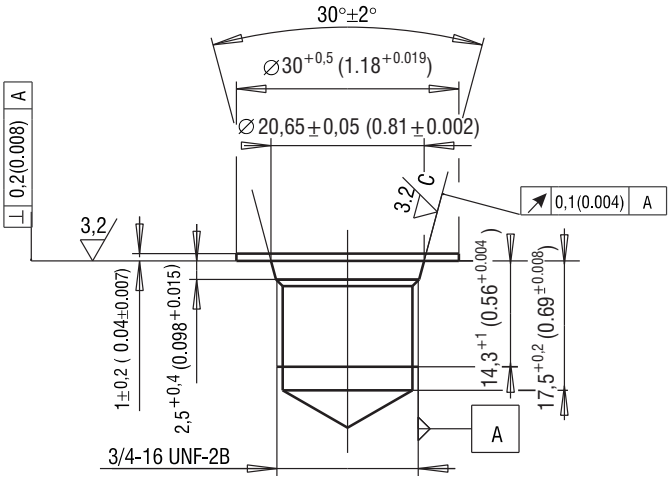

SAE6 - 9/16-18 UNF ..... A, B

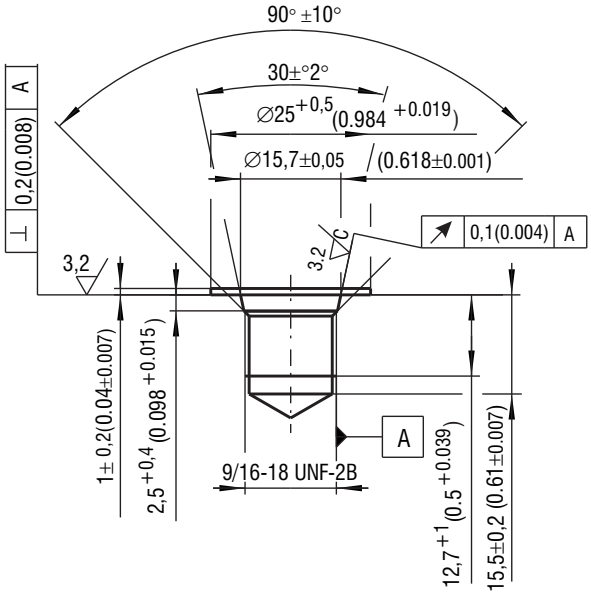

G1/2 ..... P, T

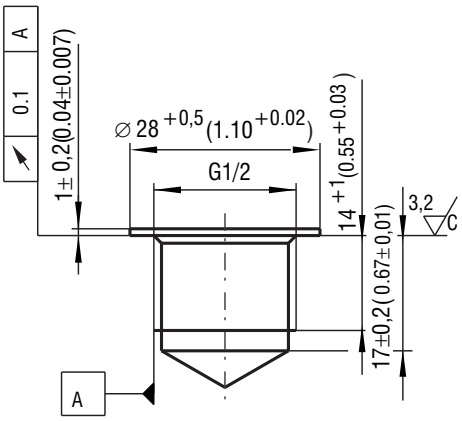

SAE4 - 7/16-20 UNF ..... M

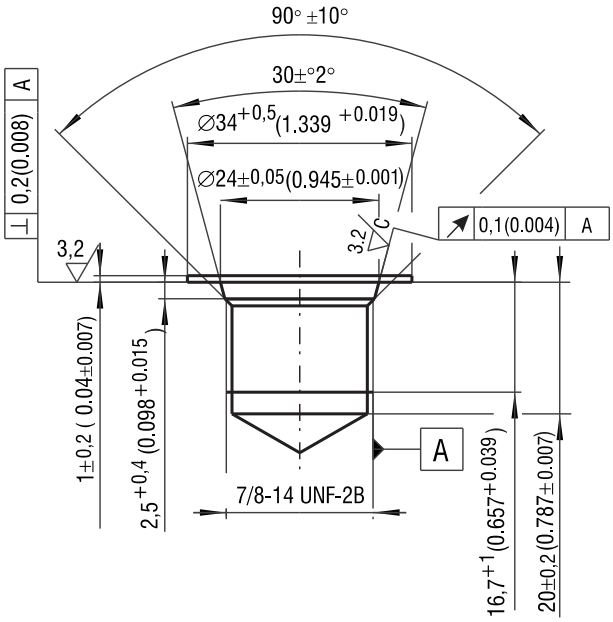

HORIZONTAL ASSEMBLY PLATES

1- 8 sections (up to 16 sections – when using centre feeding plate with bolt threads from both sides)

Complete valves in modular configuration

RPEK1-03	Dn03	Data sheet HA 4027		4-13	L2=31 mm (1.22 in)
Type	**Cavity**	**Connecting threads**	**Ordering number**	**Page**	**Description** (to select the studs)
Inlet P,T Plates with Valves					
HB03-RPEK-**MPT**	2/2 - 7/8-14UNF	G 3/8 - P, T, G 1/4 - M	28566200	17	---
HB03-RPEK-**MPT-S**	2/2 - 7/8-14UNF	SAE 8 - P, T, SAE 4 - M	29342200	17	---
HB03-RPEK-**MPT1**	2/2 - 7/8-14UNF	G 3/8 - P, T, G 1/4 - M	28813600	18	---
HB03-RPEK-**MPT1-S**	2/2 - 7/8-14UNF	SAE 8 - P, T, SAE 4 - M	29342300	18	---
HB03-RPEK-**MPT2**	2/2 - 7/8-14UNF	G 1/2 - P, T, G 1/4 - M	29401100	19	---
HB03-RPEK-**MZ**	2/2 - 7/8-14UNF	G 3/8 - P, T	28566300	20	---
HB03-RPEK-**MZ-S**	2/2 - 7/8-14UNF	SAE 8 - P, T	29342400	20	---
Centre P,T Plates					
Bolt threads from both sides					
HB03-RPEK-**01**		G 3/8 - P, T,	28659800	21	---
HB03-RPEK-**01-S**		SAE 8 - P, T	29344600	21	---
HB03-RPEK-**02**		G 3/8 - P, T, G 1/4 - M	28659900	21	---
HB03-RPEK-**02-S**		SAE 8 - P, T, SAE 4 - M	29344700	21	---
Straight-through holes for bolts					
HB03-RPEK-**03**		G 3/8 - P, T	28660000	22	L2=31 mm (1.22 in)
HB03-RPEK-**03-S**		SAE 8 - P, T	29344800	22	L2=31 mm (1.22 in)
HB03-RPEK-**04**		G 3/8 - P, T, G 1/4 - M	28660100	22	L2=31 mm (1.22 in)
HB03-RPEK-**04-S**		SAE 8 - P, T, SAE 4 - M	29344900	22	L2=31 mm (1.22 in)
Inlet P,T and End Plates without Valves					
Without recess for sealing rings					
HB03-RPEK-**05**			16786901	23	L3=14 mm (0.55 in)
HB03-RPEK-**06**		G 3/8 - P, T, G 1/4 - M	28566800	23	L2=31 mm (1.22 in)
HB03-RPEK-**06-S**		SAE 8 - P, T, SAE 4 - M	29343300	23	L2=31 mm (1.22 in)
With sealing rings' recess					
HB03-RPEK-**07**		G 3/8 - P, T, G 1/4 - M	28660200	24	L2=31 mm (1.22 in)
HB03-RPEK-**07-S**		SAE 8 - P, T, SAE 4 - M	29345000	24	L2=31 mm (1.22 in)
HB03-RPEK-**08**			28660300	24	L3=14 mm (0.55 in)
Horizontal Sandwich Plates with Valves					
HB03-RPEK-**MP1**	3/2 - 3/4-16UNF	G 1/4 - M	28658500	25	L1=40 mm (1.57 in)
HB03-RPEK-**MP1-S**	3/2 - 3/4-16UNF	SAE 4 - M	29344000	25	L1=40 mm (1.57 in)
HB03-RPEK-**MP2**	3/2 - 3/4-16UNF	G 1/4 - M	28658900	26	L1=40 mm (1.57 in)
HB03-RPEK-**MP2-S**	3/2 - 3/4-16UNF	SAE 4 - M	29344100	26	L1=40 mm (1.57 in)
HB03-RPEK-**MC**	2/2 - 3/4-16UNF		28659200	27	L1=40 mm (1.57 in)
HB03-RPEK-**MD**	2/2 - 3/4-16UNF		28659400	28	L1=40 mm (1.57 in)
HB03-RPEK-**MAB**	2/2 - 3/4-16UNF	G 1/4 - A, B	28659700	29	L1=40 mm (1.57 in)
HB03-RPEK-**MAB-S**	2/2 - 3/4-16UNF	SAE 6 - A, B	29344200	29	L1=40 mm (1.57 in)
HB03-RPEK-**MAB1**	M20x1,5	G 1/4 - A, B	28650700	30	L1=40 mm (1.57 in)
HB03-RPEK-**MAB1-S**	M20x1,5	SAE 6 - A, B	29344500	30	L1=40 mm (1.57 in)
HB03-RPEK-**MAB2**	2/2 - 3/4-16UNF		29397800	31	L1=40 mm (1.57 in)

Other possible assembly parts - for connecting material see pages 32, 33.

- A pressure plug **15625300** can be ordered measuring outlet and off the **A, B - G1/4** valve outlet.
- A pressure plug **20400400** can be ordered measuring outlet and off the **A, B - SAE 6** valve outlet.
- A pressure plug **20399400** can be ordered to blank off the **M - SAE 4**.

Inlet Palate HB03-RPEK-MPT/-(S) 28566200/(29342200)

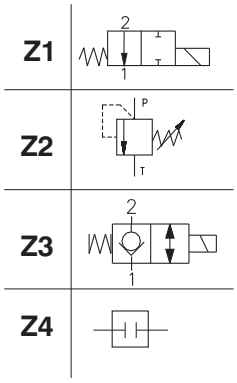

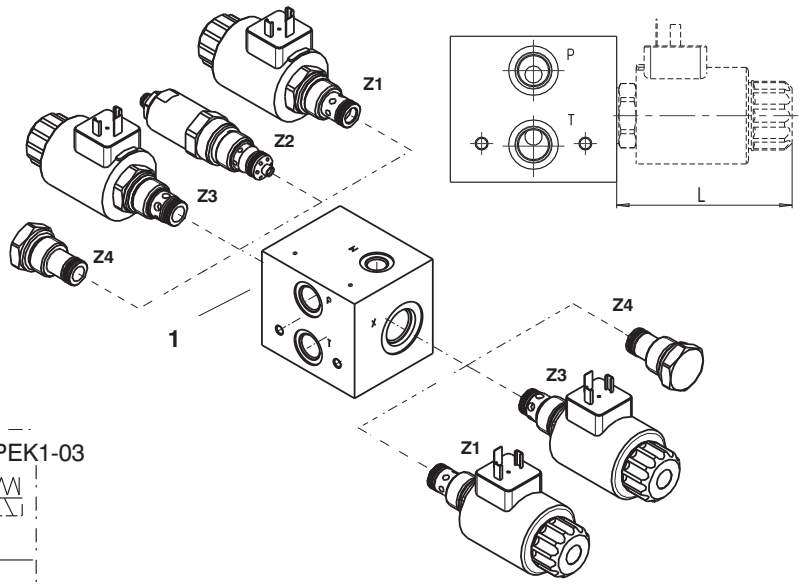

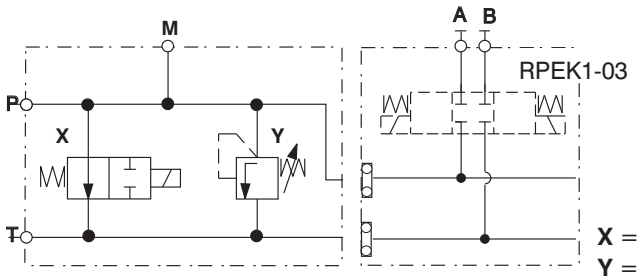

X = Z1, Z3, Z4, Z5
Y = Z1, Z2, Z3, Z5

Pos.	Name	Type	Max. L [mm (in)]	Weight [kg (lb)]	Data sheet	Ordering nummer
1	Inlet Palate	HB03-RPEK-MPT		0,813(1.79)		28566200
		HB03-RPEK-MPT-S				29342200
Z1	Directional valve	SD2E-B2	82 (3.23)		HA 4060	
Z2	Pressure valve	SR1A-B2	65 (2.56)		HA 5064	
Z3	Directional valve	SD3E-B2	82 (3.23)		HA 4063	
Z4	Check valve	SC1F-B2	28 (1.10)		HA 5017	
Z5	Plug 2/2-7/8-14UNF		10 (0.39)			19356300

Valve Dimensions - MPT/-(S)

Dimensions in millimeters (inches)

TYPE	A	B
G	29,5 (1.16)	56 (2.20)
SAE	31(1.22)	54 (2.13)

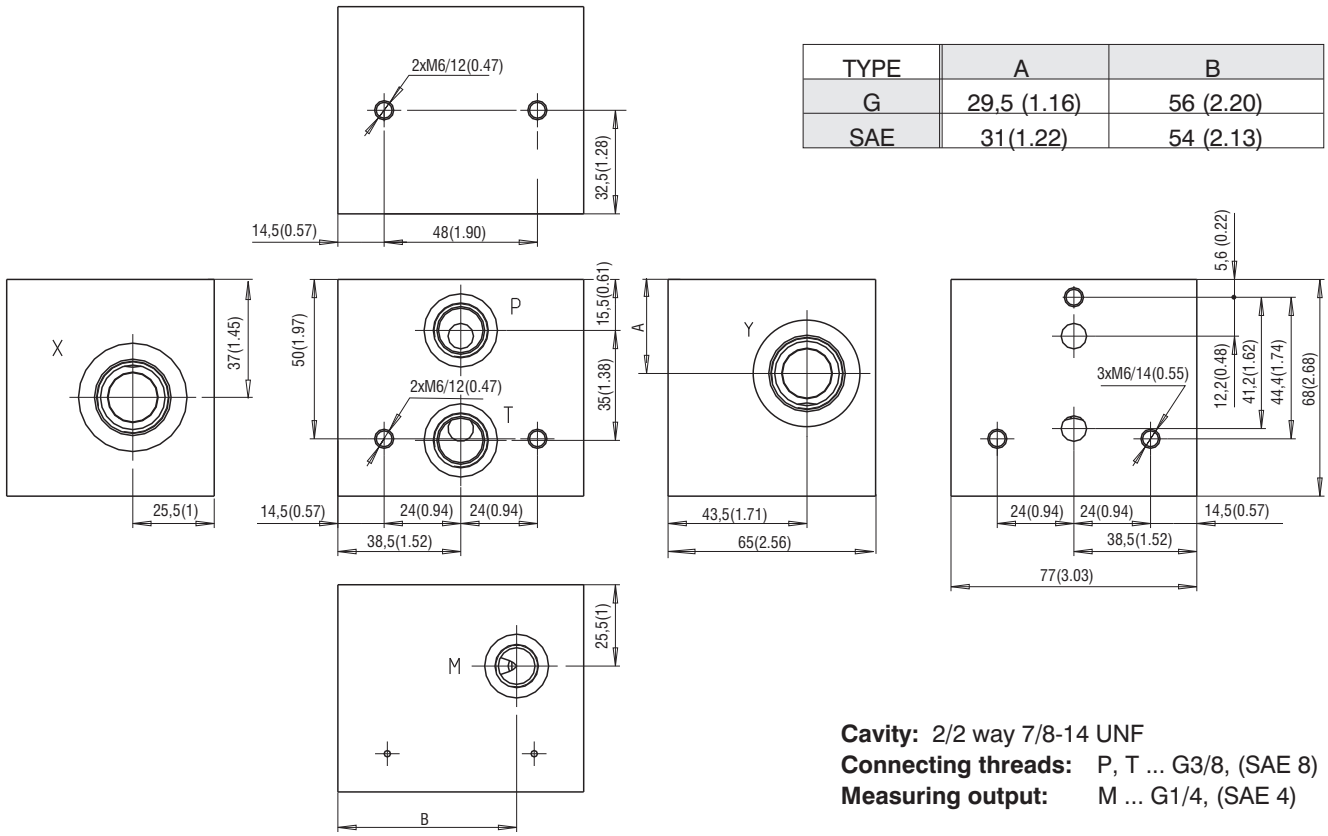

Cavity: 2/2 way 7/8-14 UNF
Connecting threads: P, T ... G3/8, (SAE 8)
Measuring output: M ... G1/4, (SAE 4)

Inlet Palate HB03-RPEK-MPT1/-(S) 28813600/(29342300)

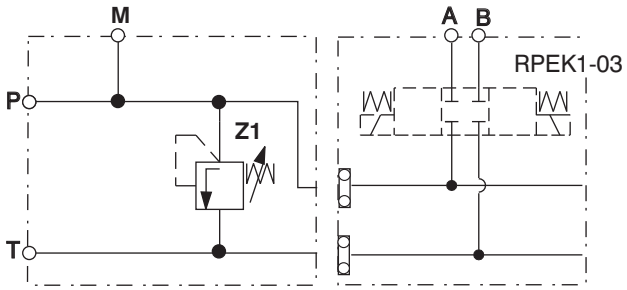

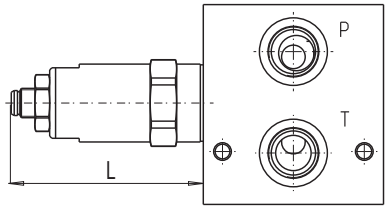

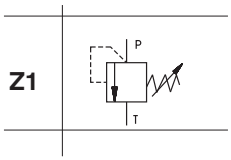

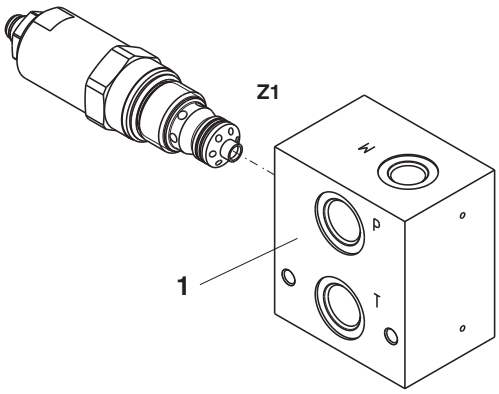

Pos.	Name	Type	Max. L [mm (in)]	Weight [kg (lb)]	Data sheet	Ordering nummer
1	Inlet Palate	HB03-RPEK-MPT1		0,407(0.897)		28813600
		HB03-RPEK-MPT1-S				29342300
Z1	Pressure valve	SR1A-B2	65 (2.56)		HA 5064	

Valve Dimensions - MPT1/-(S)

Dimensions in millimeters (inches)

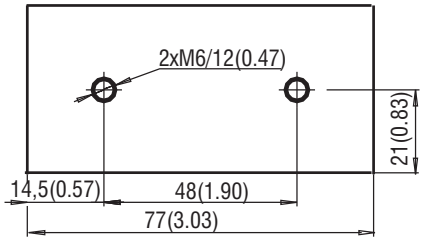

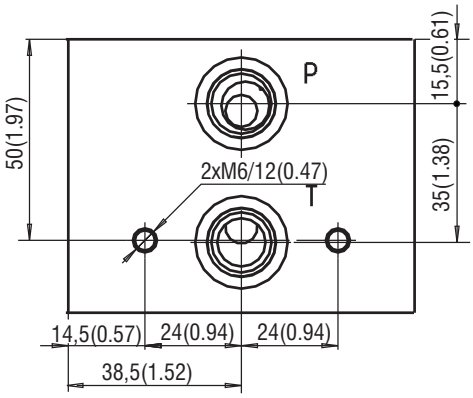

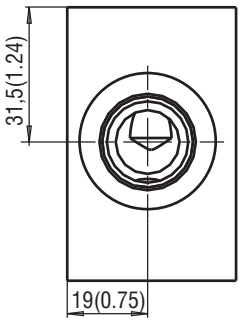

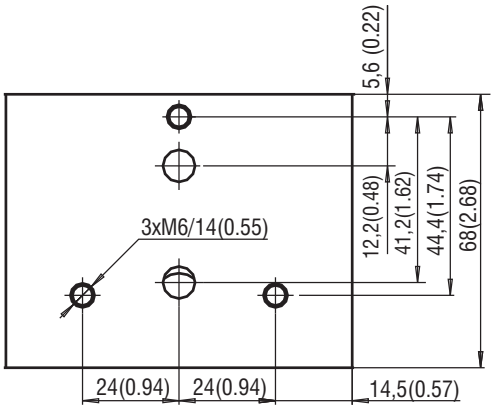

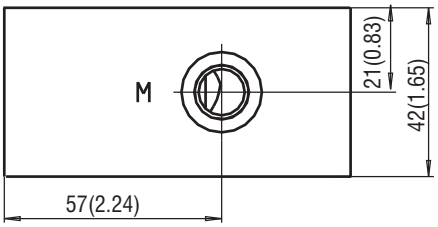

Cavity: 2/2 way 7/8-14 UNF
Connecting threads: P, T ... G3/8, (SAE 8)
Measuring output: M ... G1/4, (SAE 4)

Inlet Palate HB03-RPEK-MPT2 29401100

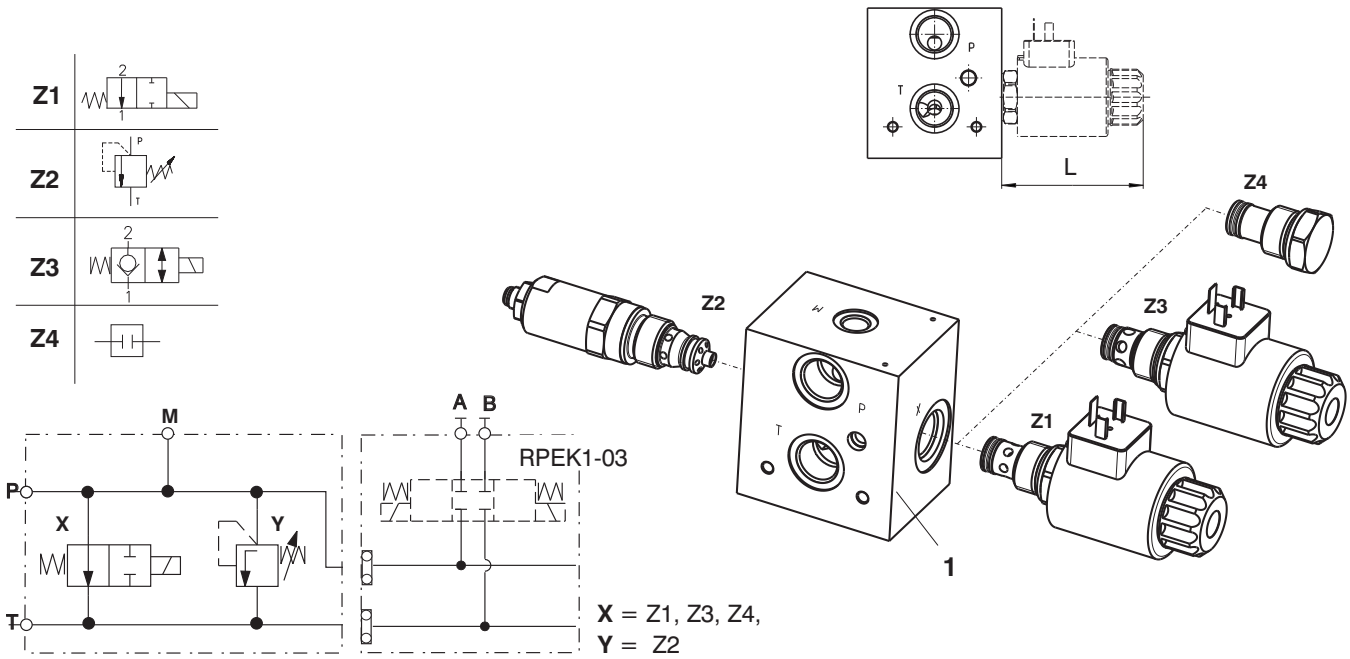

Pos.	Name	Type	Max. L [mm (in)]	Weight [kg (lb)]	Data sheet	Ordering nummer
1	Inlet Palate	HB03-RPEK-MPT2		0.934 (2.059)		29401100
Z1	Directional valve	SD2E-B2	82 (3.23)		HA 4060	
Z2	Pressure valve	SR1A-B2	65 (2.56)		HA 5064	
Z3	Directional valve	SD3E-B2	82 (3.23)		HA 4063	
Z4	Plug 2/2-7/8-14UNF		10 (0.39)			19356300

Valve Dimensions - MPT2

Dimensions in millimeters (inches)

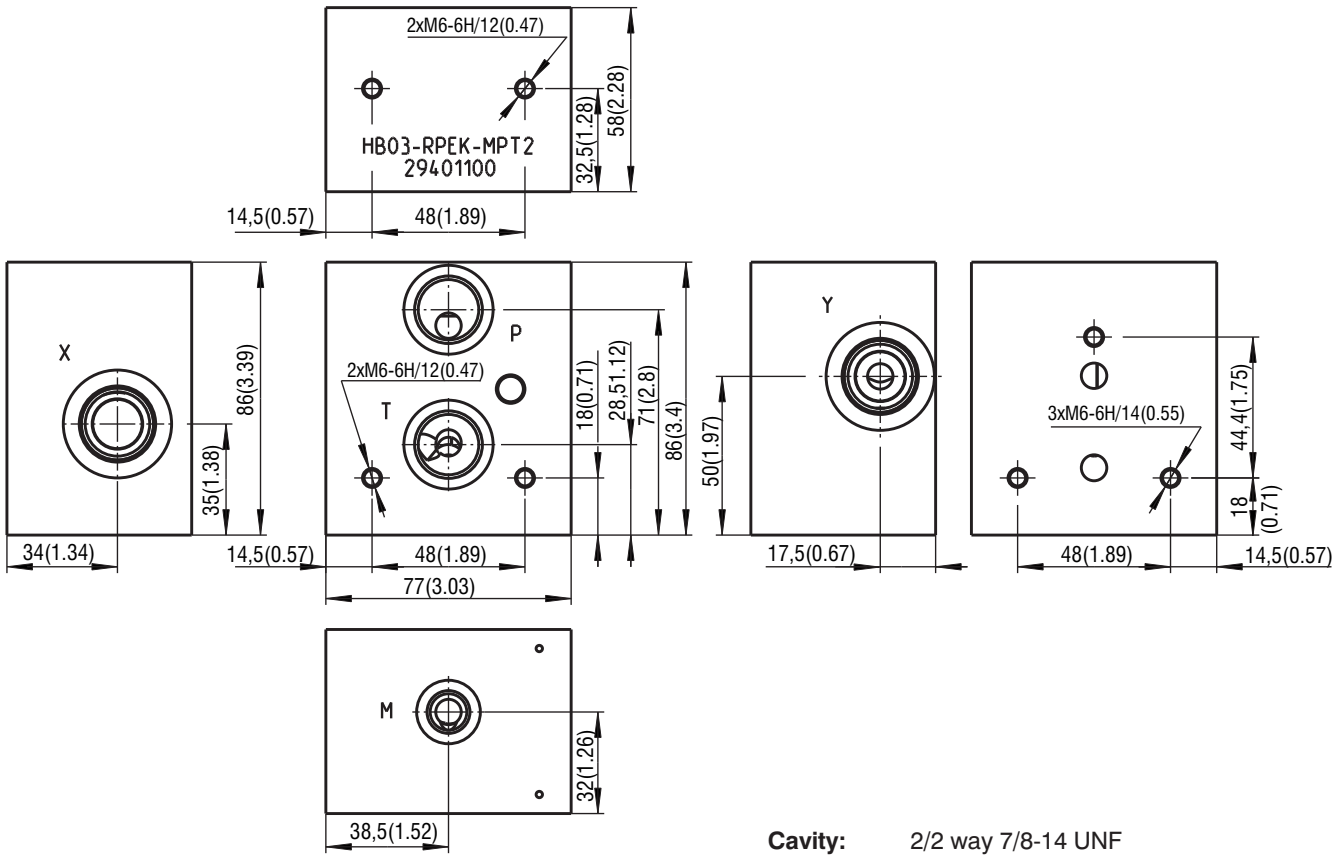

Cavity: 2/2 way 7/8-14 UNF
Connecting threads: P, T... G 1/2
Measuring output: M ... G1/4

Inlet Palate HB03-RPEK-MZ/-(S) 28566300/(29342400)

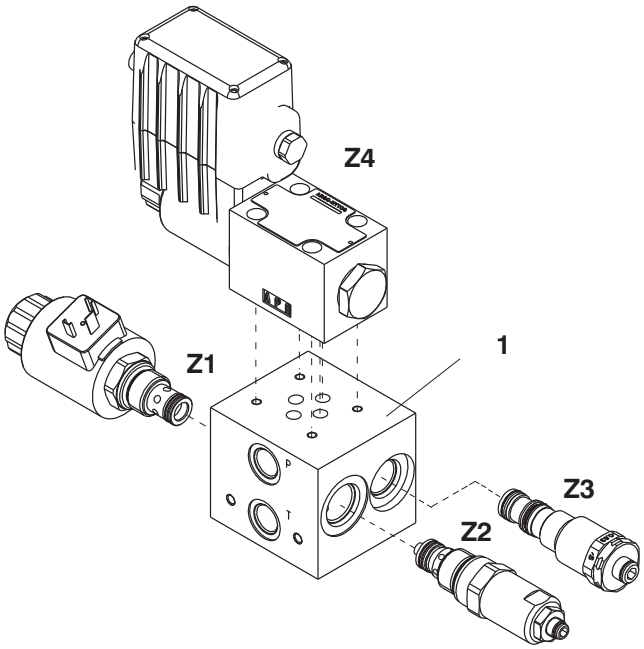

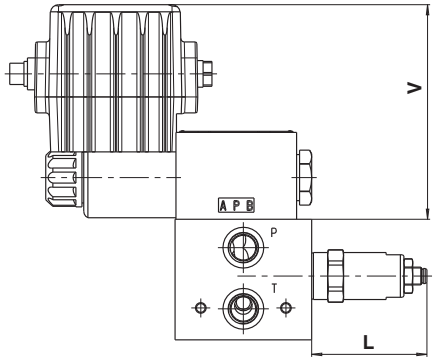

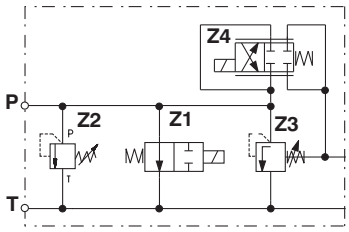

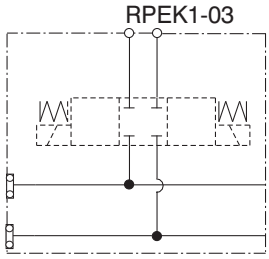

Pos.	Name	Type	Max. L [mm (in)]	Max. V [mm (in)]	Weight [kg (lb)]	Data sheet	Ordering nummer
1	Inlet Palate	HB03-RPEK-MZ			0,846 (1.865)		28566300
		HB03-RPEK-MZ-S					29342400
Z1	Directional valve	SD2E-B2	82 (3.23)			HA 4060	
Z2	Pressure valve	SR1A-B2	65 (2.56)			HA 5064	
Z3	3 way Pressure compensator	TV2-063	42 (1.65)			HA 5168	
Z4	Proportional valve	PRM2-06	140 (5.51)	121(4.76)		HA 5105	
Z3	Plug 2/2-7/8-14UNF		10 (0.39)				19356300

Valve Dimensions - MZ/-(S)

Dimensions in millimeters (inches)

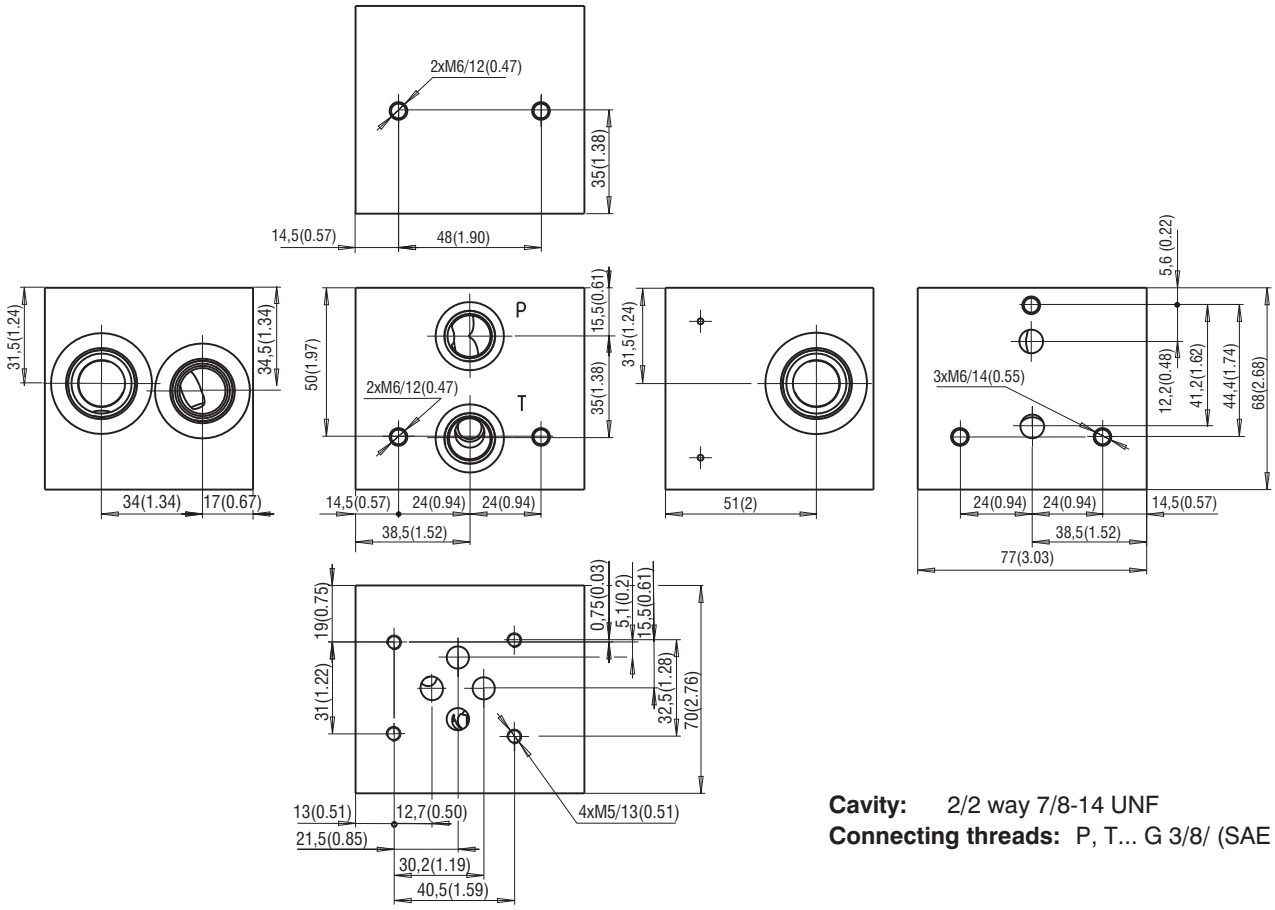

Cavity: 2/2 way 7/8-14 UNF
Connecting threads: P, T... G 3/8/ (SAE 8)

Centre P,T Plate HB03-RPEK-01/-(S) 28659800/(29344600)

- Bolt threads from both sides

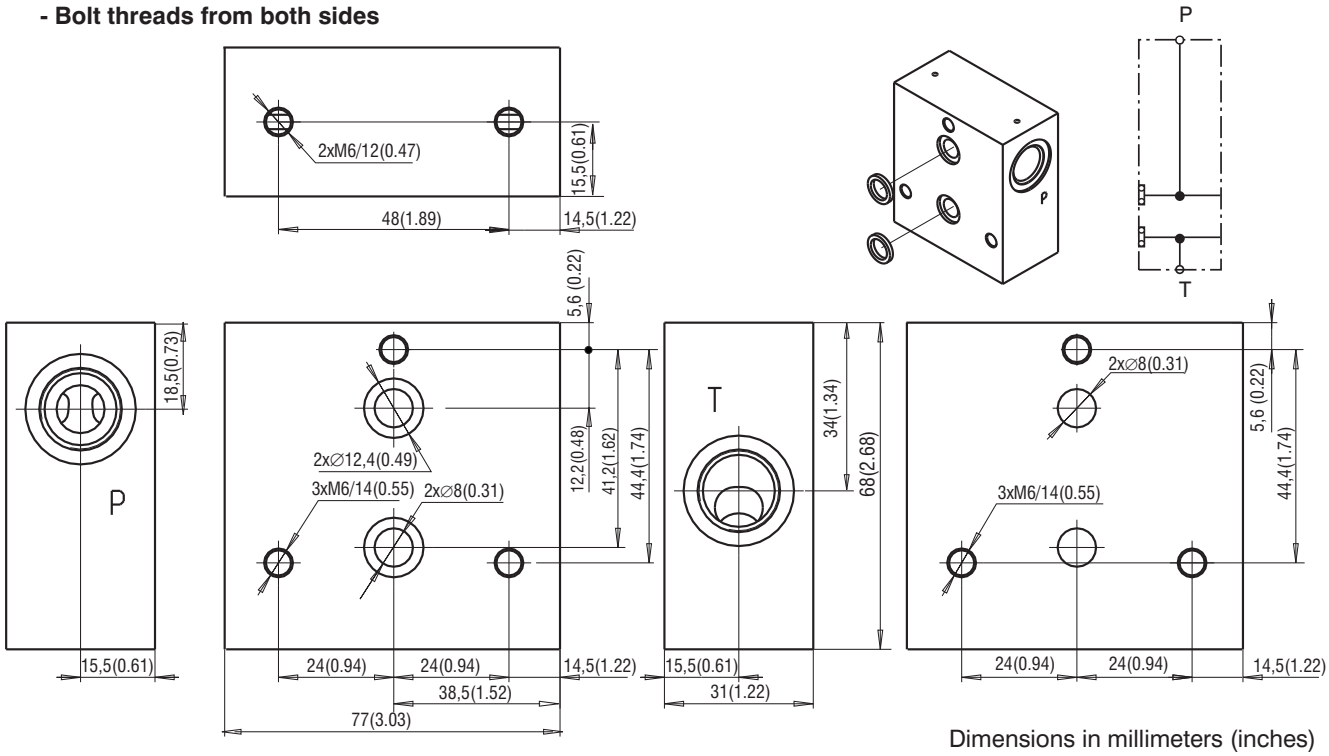

Dimensions in millimeters (inches)

Centre P,T Plate HB03-RPEK-02/-(S) 28659900/(29344700)

- Bolt threads from both sides

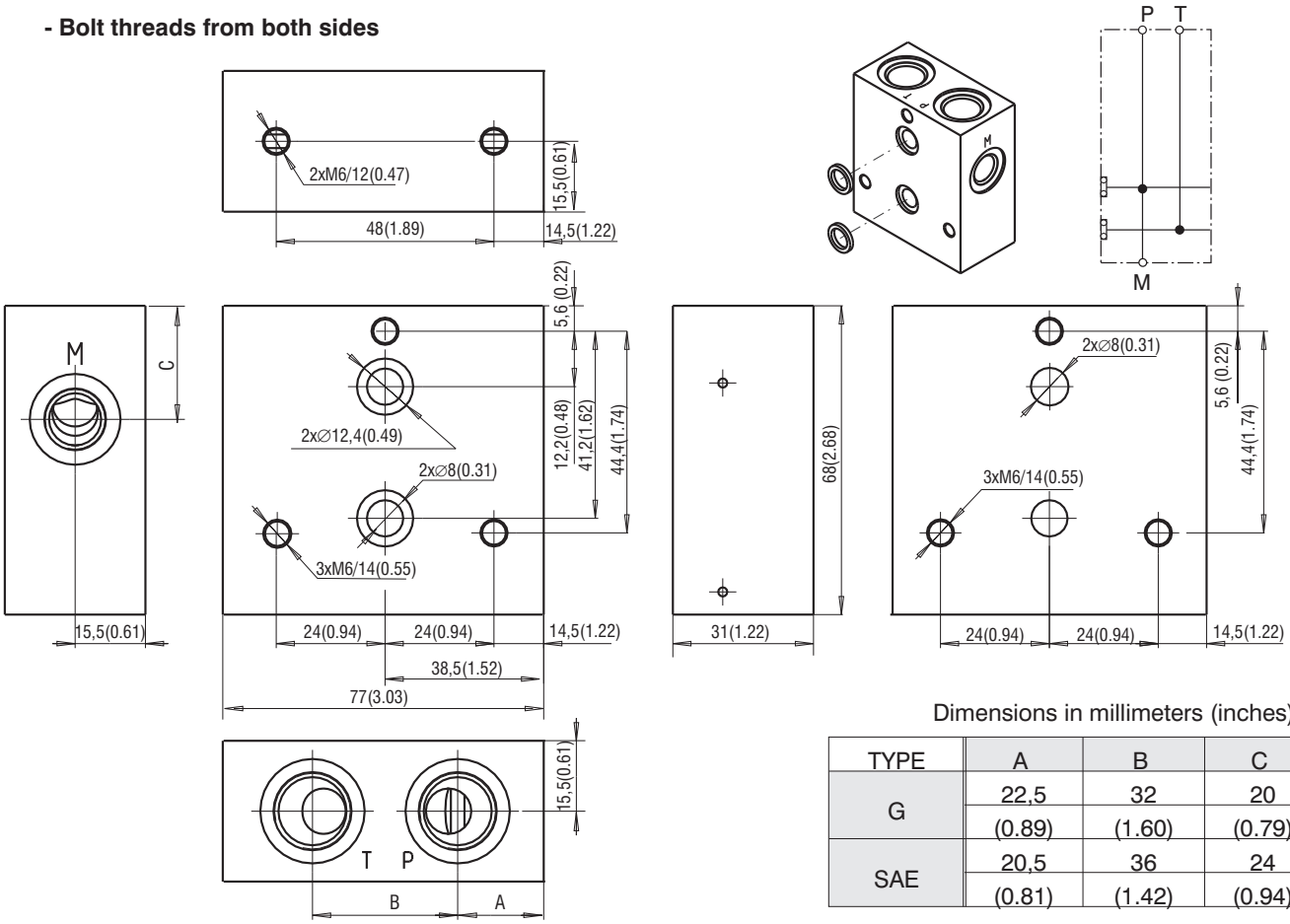

Dimensions in millimeters (inches)

TYPE	A	B	C
G	22,5	32	20
	(0.89)	(1.60)	(0.79)
SAE	20,5	36	24
	(0.81)	(1.42)	(0.94)

Name	Type	Port size			Ordering number	Weight [kg (lb)]
		P	T	M		
Plate+seals	HB03-RPEK-01	G3/8	G3/8	-	28659800	0,318 (0.701)
Plate+seals	HB03-RPEK-01-S	SAE 8	SAE 8	-	29344600	
Plate+seals	HB03-RPEK-02	G3/8	G3/8	G1/4	28659900	0,318 (0.701)
Plate+seals	HB03-RPEK-02-S	SAE 8	SAE 8	SAE 4	29344700	

Centre P,T Plate HB03-RPEK-03/-(S) 28660000/(29344800)

- **through holes for bolts - straight**

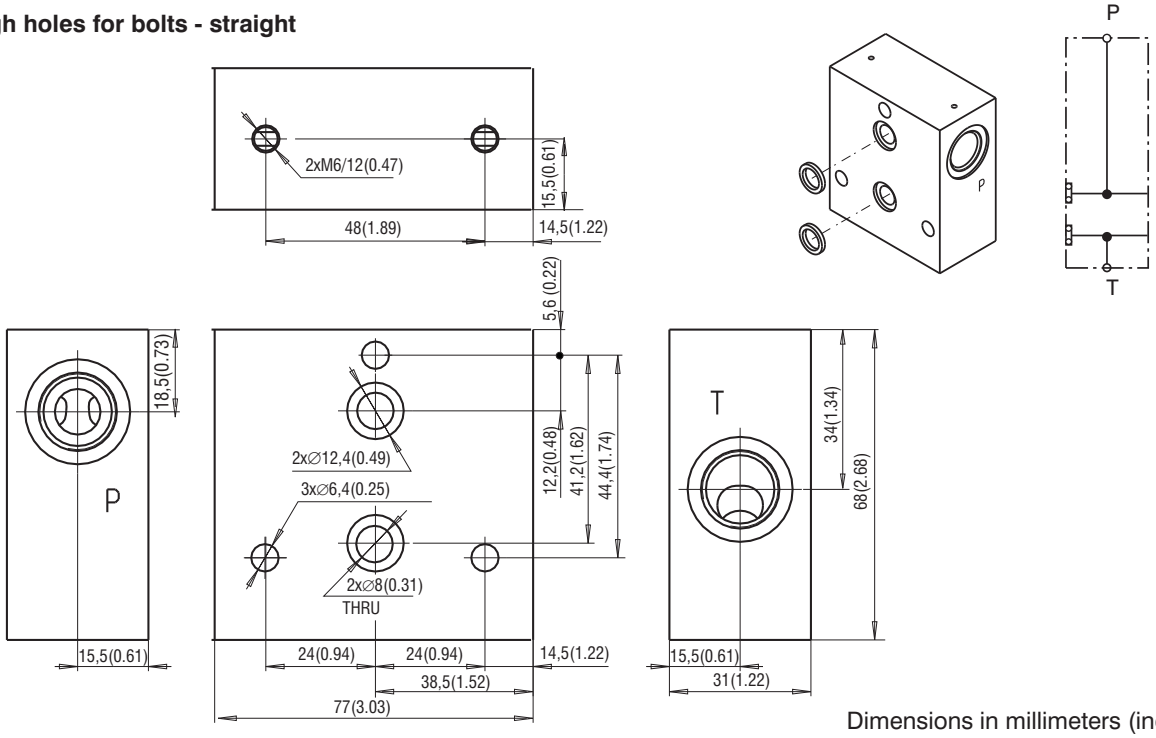

Dimensions in millimeters (inches)

Centre P,T Plate HB03-RPEK-04/-(S) 28660100/(29344900)

- **through holes for bolts - straight**

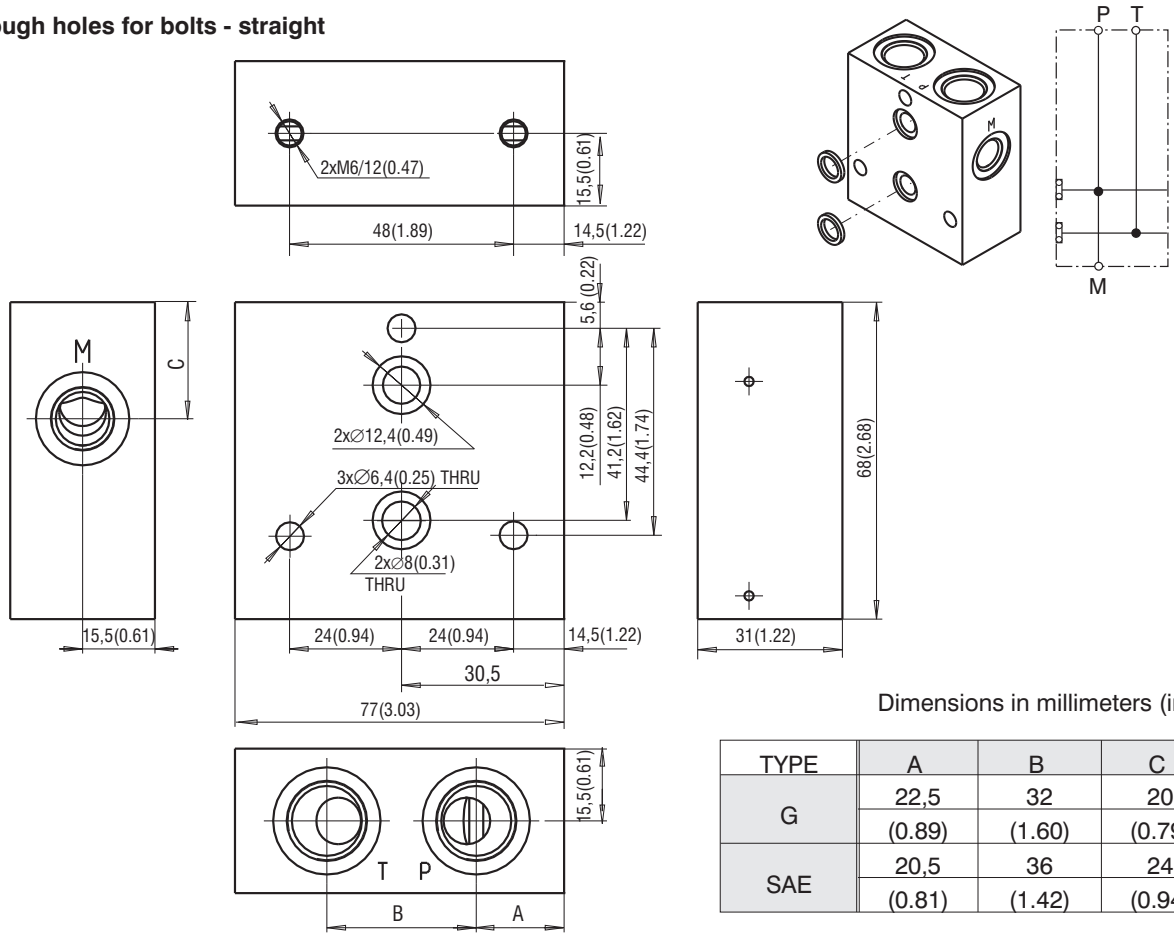

Dimensions in millimeters (inches)

TYPE	A	B	C
G	22,5	32	20
	(0.89)	(1.60)	(0.79)
SAE	20,5	36	24
	(0.81)	(1.42)	(0.94)

Name	Type	Port size			Ordering number	Weight [kg (lb)]
		P	T	M		
Plate+seals	HB03-RPEK-03	G3/8	G3/8	-	28660000	0,315 (0.694)
Plate+seals	HB03-RPEK-03-S	SAE 8	SAE 8	-	29344800	
Plate+seals	HB03-RPEK-04	G3/8	G3/8	G1/4	28666010	0,305 (0.672)
Plate+seals	HB03-RPEK-04-S	SAE 8	SAE 8	SAE 4	29344900	

End Plate HB03-RPEK-05 16786901

- without sealing rings

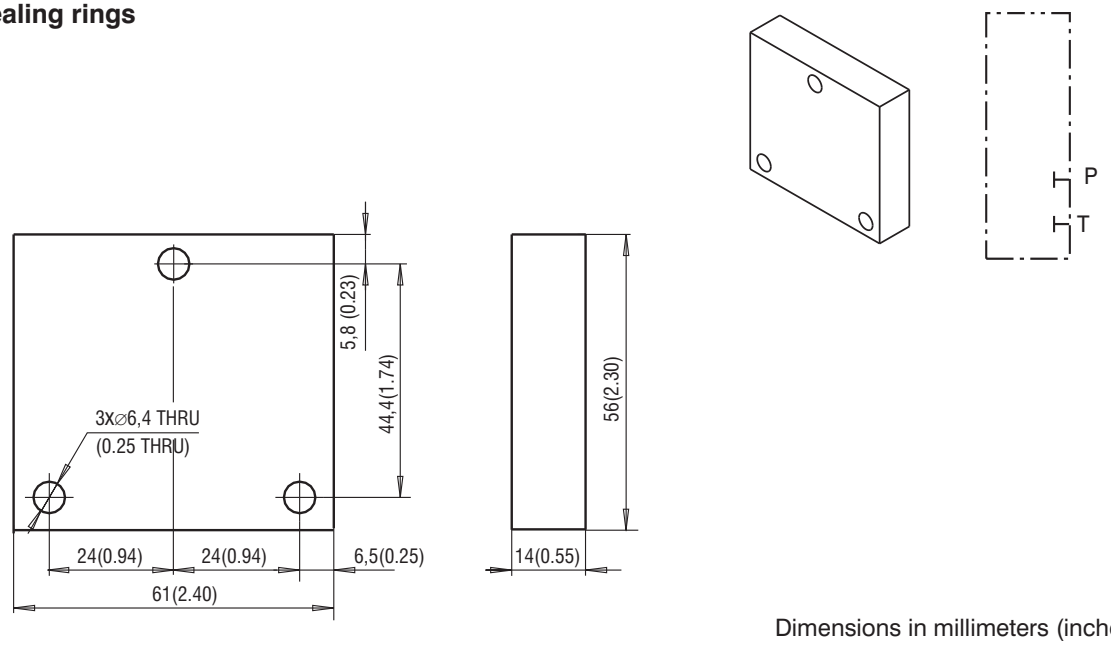

Dimensions in millimeters (inches)

Inlet P,T Plate HB03-RPEK-06/-(S) 28566800/(29343300)

- without recess for sealing

Dimensions in millimeters (inches)

TYPE	A	B
G	23 (0.91)	23 (0.91)
SAE	18 (0.71)	21(0.83)

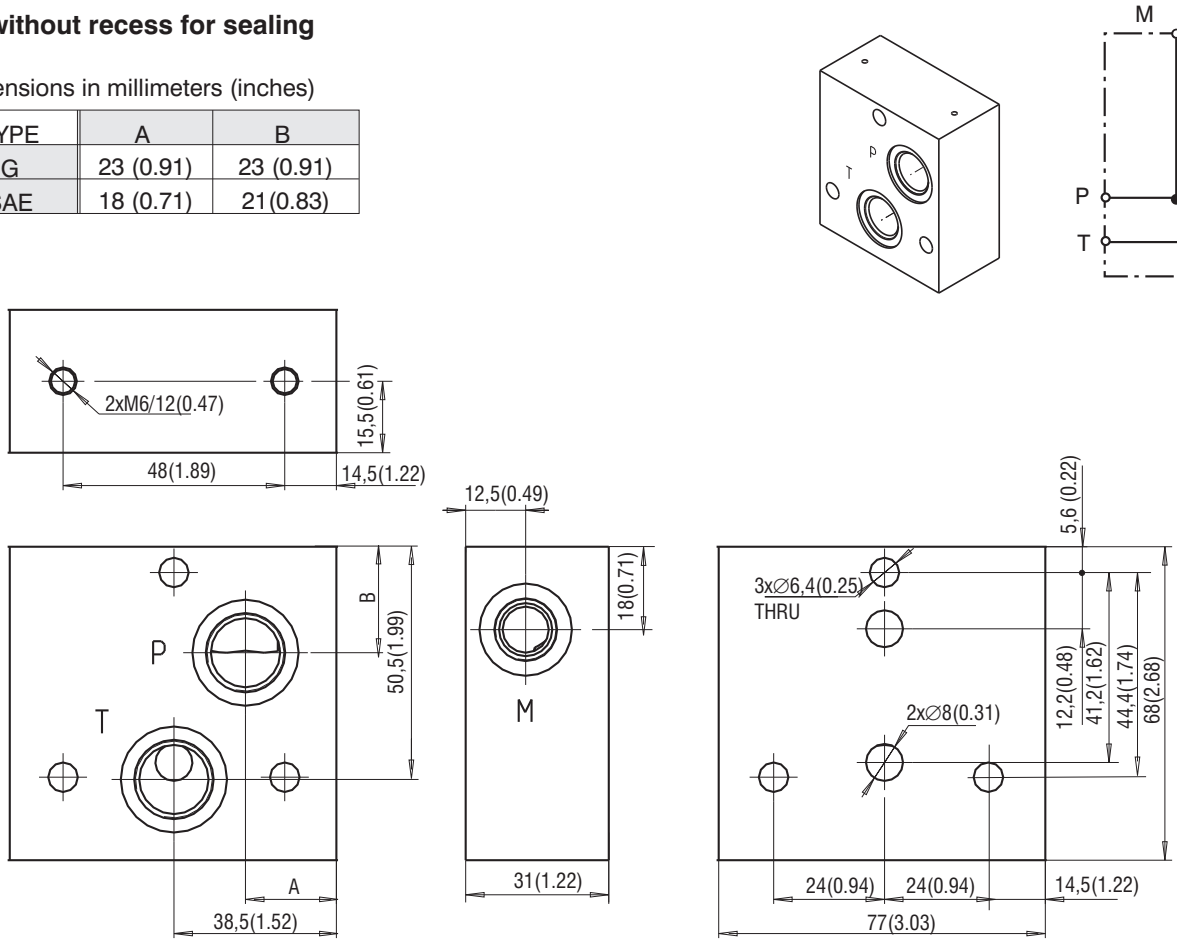

Name	Type	Port size			Ordering number	Weight [kg (lb)]
		P	T	M		
Plate	HB03-RPEK-05	-	-	-	16786901	0,130 (0.287)
Plate	HB03-RPEK-06	G3/8	G3/8	G1/4	28566800	0,315 (0.694)
Plate	HB03-RPEK-06-S	SAE 8	SAE 8	SAE 4	29343300	

Inlet P,T Plate HB03-RPEK-07/-(S) 28660200/(29345000)

- with sealing rings

Dimensions in millimeters (inches)

TYPE	A	B
G	23 (0.91)	23 (0.91)
SAE	18 (0.71)	21(0.83)

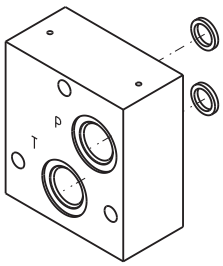

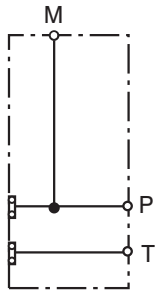

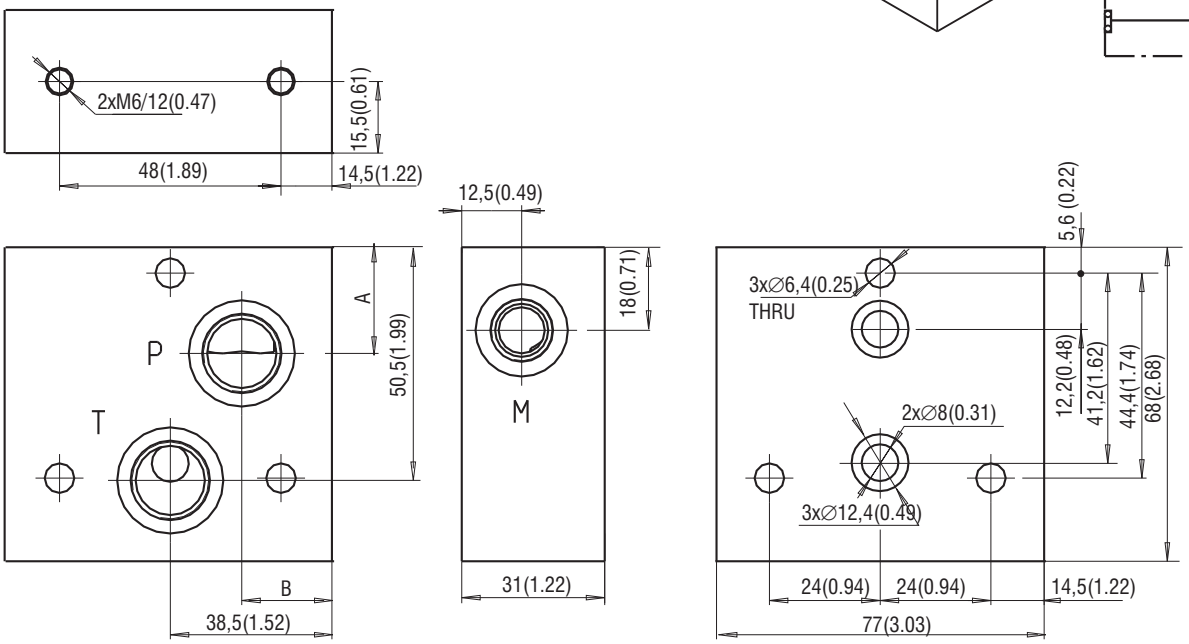

End Plate HB03-RPEK-08 28660300

- with sealing rings

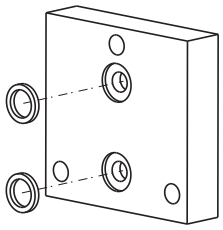

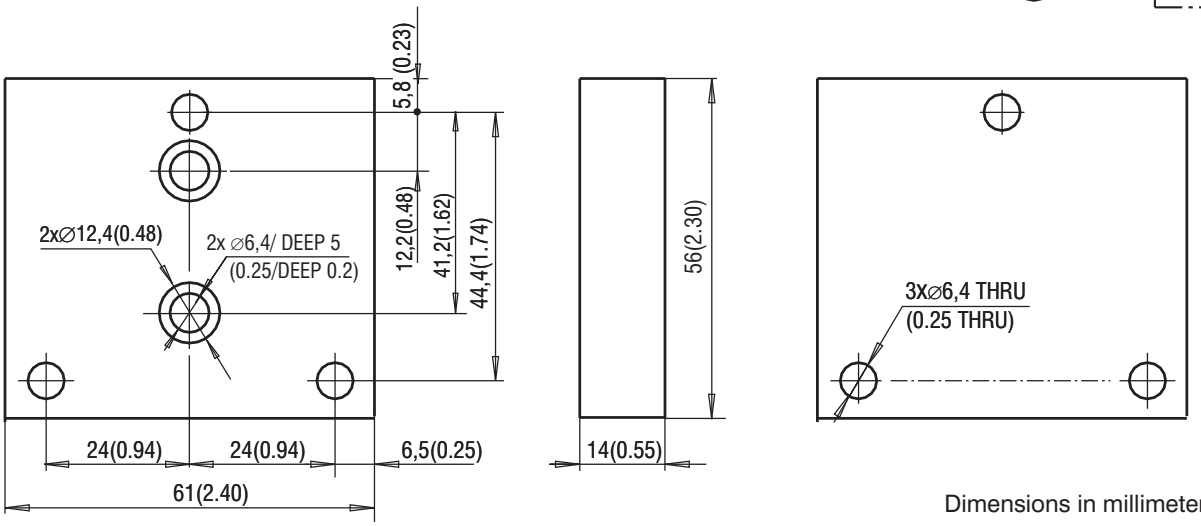

Dimensions in millimeters (inches)

Name	Type	Port size			Ordering number	Weight [kg (lb)]
		P	T	M		
Plate+seals	HB03-RPEK-07	G3/8	G3/8	G1/4	28660200	0,314 (0.692)
Plate+seals	HB03-RPEK-07-S	SAE 8	SAE 8	SAE 4	29345000	
Plate+seals	HB03-RPEK-08	-	-	-	28660300	0,135 (0.298)

Sandwich Plate HB03-RPEK-MP1/-(S) 28658500/(29344000)

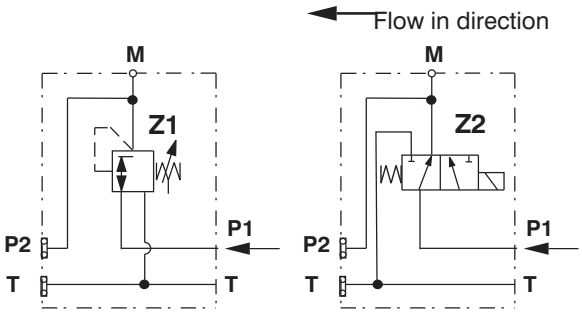

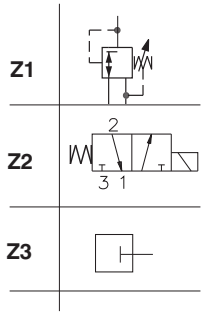

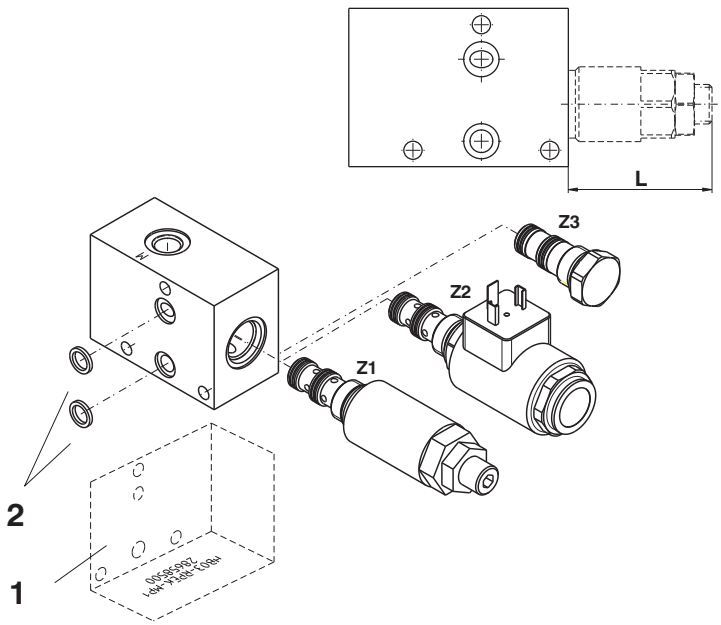

Pos.	Name	Type	Max. L [mm (in)]	Weight [kg (lb)]	Data sheet	Ordering number
1	Sandwich plate + seals	HB03-RPEK-MP1		0,325(0.716)		28658500
		HB03-RPEK-MP1-S				29344000
Z1	Pressure valve	SP2A-A3	77 (3.03)		HA 5143	
Z2	Directional valve	SD2E-A3	70 (2.75)		HA 4041	
Z3	Plug 3/4-16UNF		5 (0.20)			22751900
2	**Spare Seal kit- Square ring**					
	Standard - NBR70	9,25 x 1,68 (2 pcs.)				15608800
	Viton	9,25 x 1,78 (2 pcs.)				20152400

Valve Dimensions - MP1/-(S)

Dimensions in millimeters (inches)

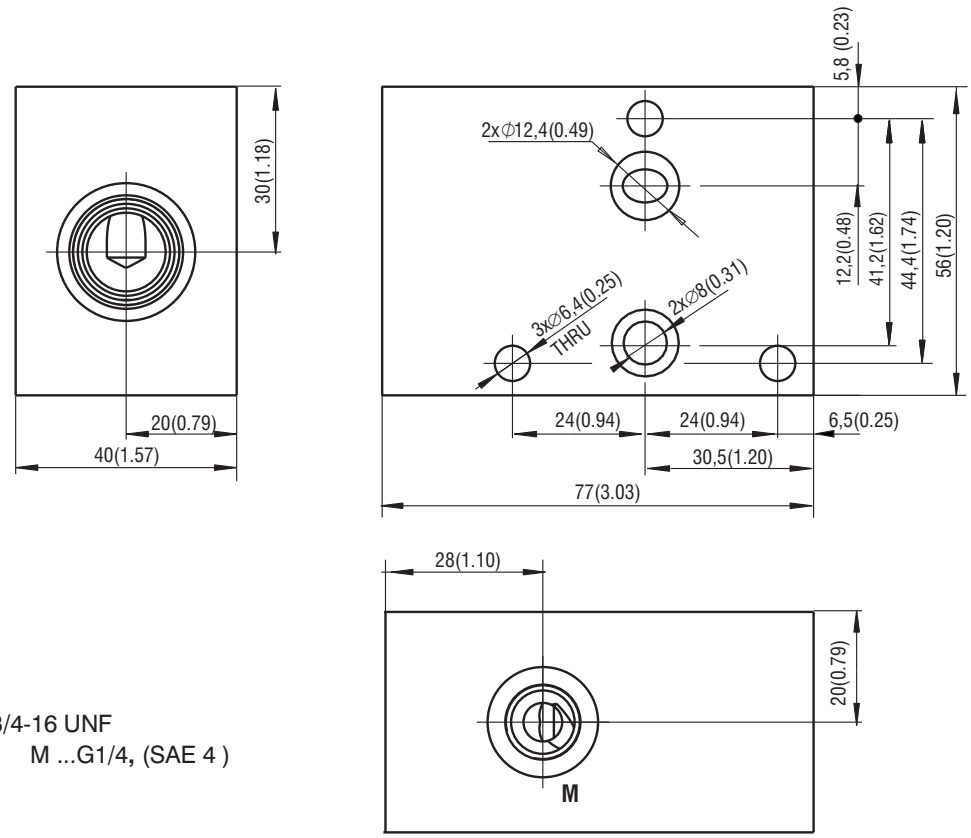

Cavity: 3/2 way 3/4-16 UNF
Measuring output: M ...G1/4, (SAE 4)

Sandwich Plate HB03-RPEK-MP2/-(S) 28658900/(29344100)

Flow in direction

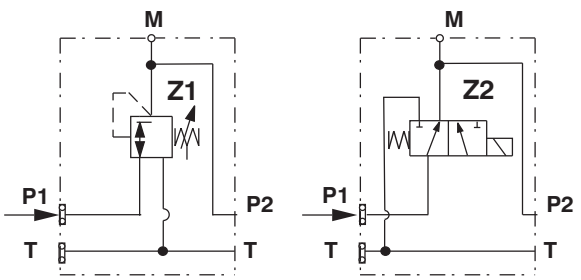

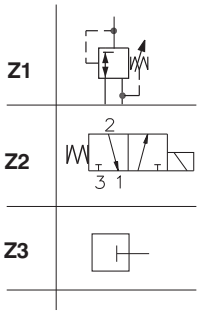

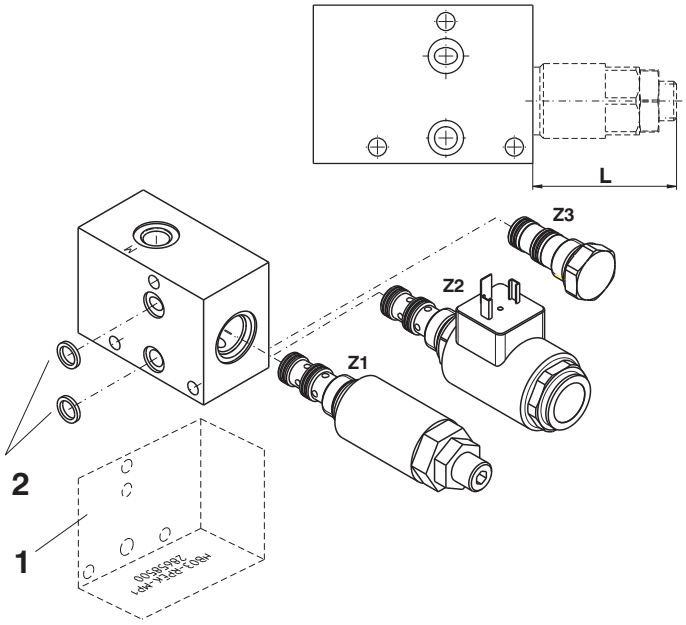

Pos.	Name	Type	Max. L [mm (in)]	Weight [kg (lb)]	Data sheet	Ordering number
1	Sandwich Plate + seals	HB03-RPEK-MP2		0,325(0.716)		28658900
		HB03-RPEK-MP2-S				29344100
Z1	Pressure reducing valve	SP2A-A3	77 (3.03)		HA 5143	
Z2	Directional valve	SD2E-A3	70 (2.75)		HA 4041	
Z3	Plug 3/4-16UNF		5 (0.20)			22751900
2	**Spare Seal kit- Square ring**					
	Standard - NBR70	9,25 x 1,68 (2 pcs.)				15608800
	Viton	9,25 x 1,78 (2 pcs.)				20152400

Valve Dimensions - MP2/-(S)

Dimensions in millimeters (inches)

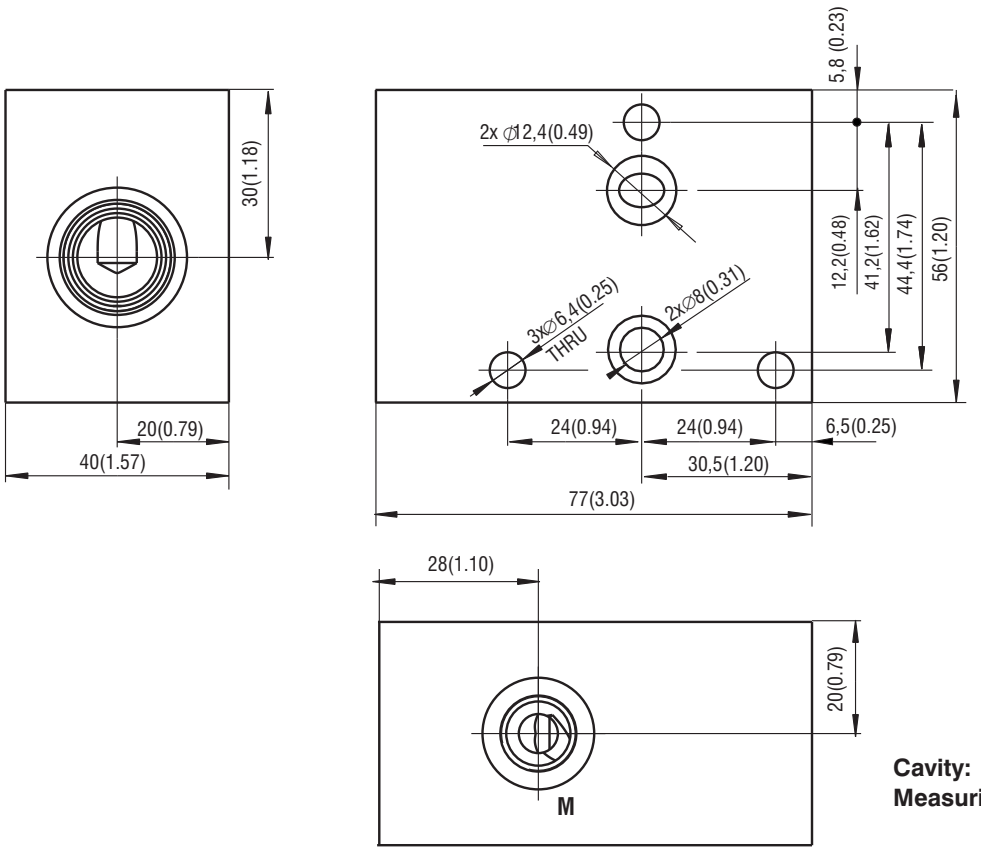

Cavity: 3/2 way 3/4-16 UNF
Measuring output: M ...G1/4, (SAE 4)

Sandwich Plate HB03-RPEK-MC 28659200

CONNECTION A-B, B-A

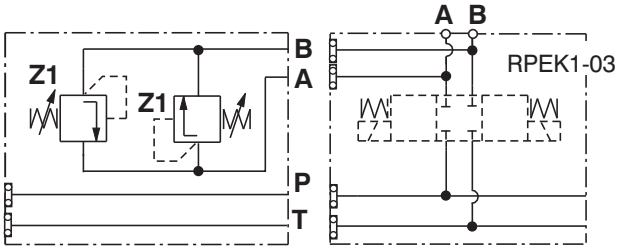

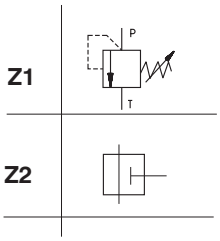

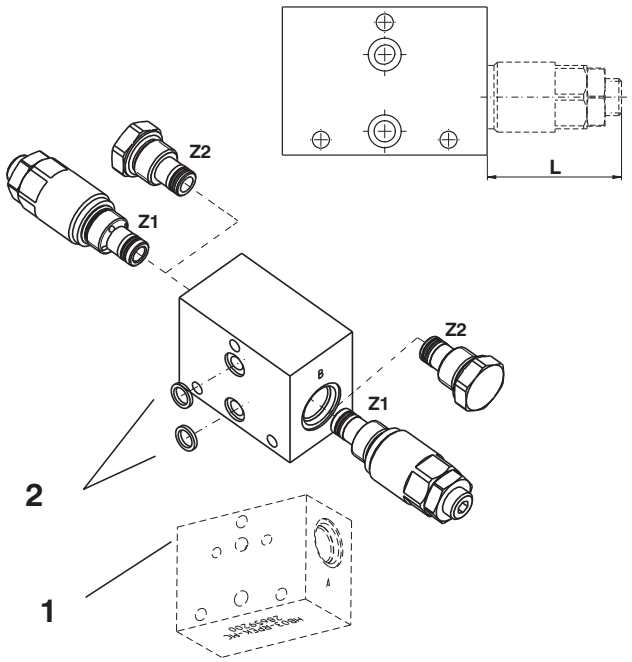

Pos.	Name	Type	max L [mm (in)]	Weight [kg (lb)]	Data sheet	Ordering number
1	Block + seals	HB03-RPEK-MC		0,379 (0.835)		28659200
Z1	Pressure valve	SR1A-A2	49,5 (1.95)		HA 5063	
Z2	Plug 2/2- 3/4-16UNF		7,5 (0.29)			15960800
2	**Spare Seal kit- Square ring**					
	Standard - NBR70	9,25 x 1,68 (2 pcs.)				15608800
	Viton	9,25 x 1,78 (2 pcs.)				20152400

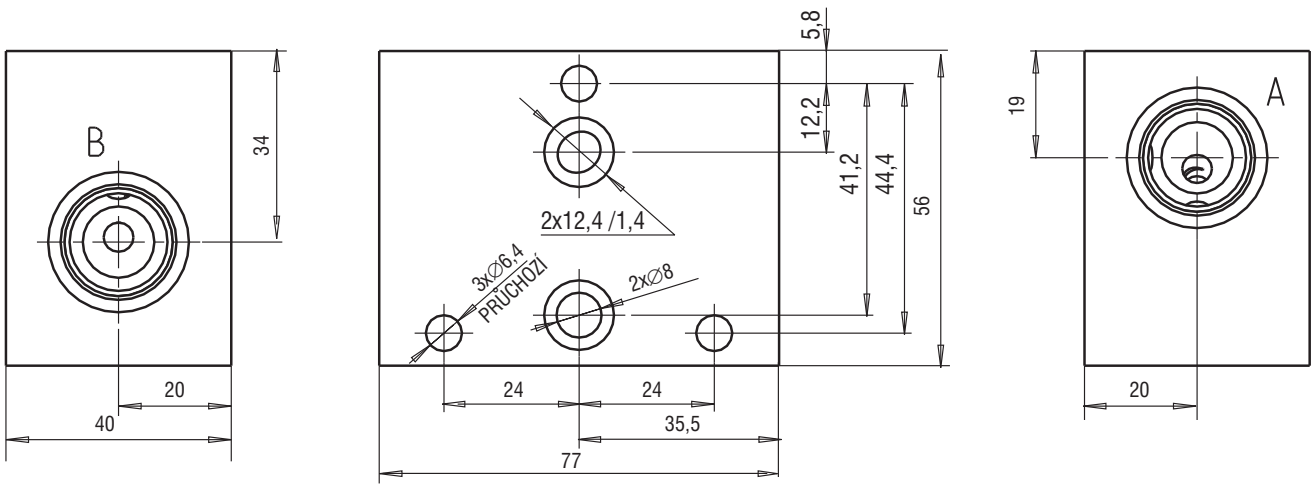

Cavity: **2/2-3/4-16 UNF**

Sandwich Plate HB03-RPEK-MD 28659400

CONNECTION A-T, B-T

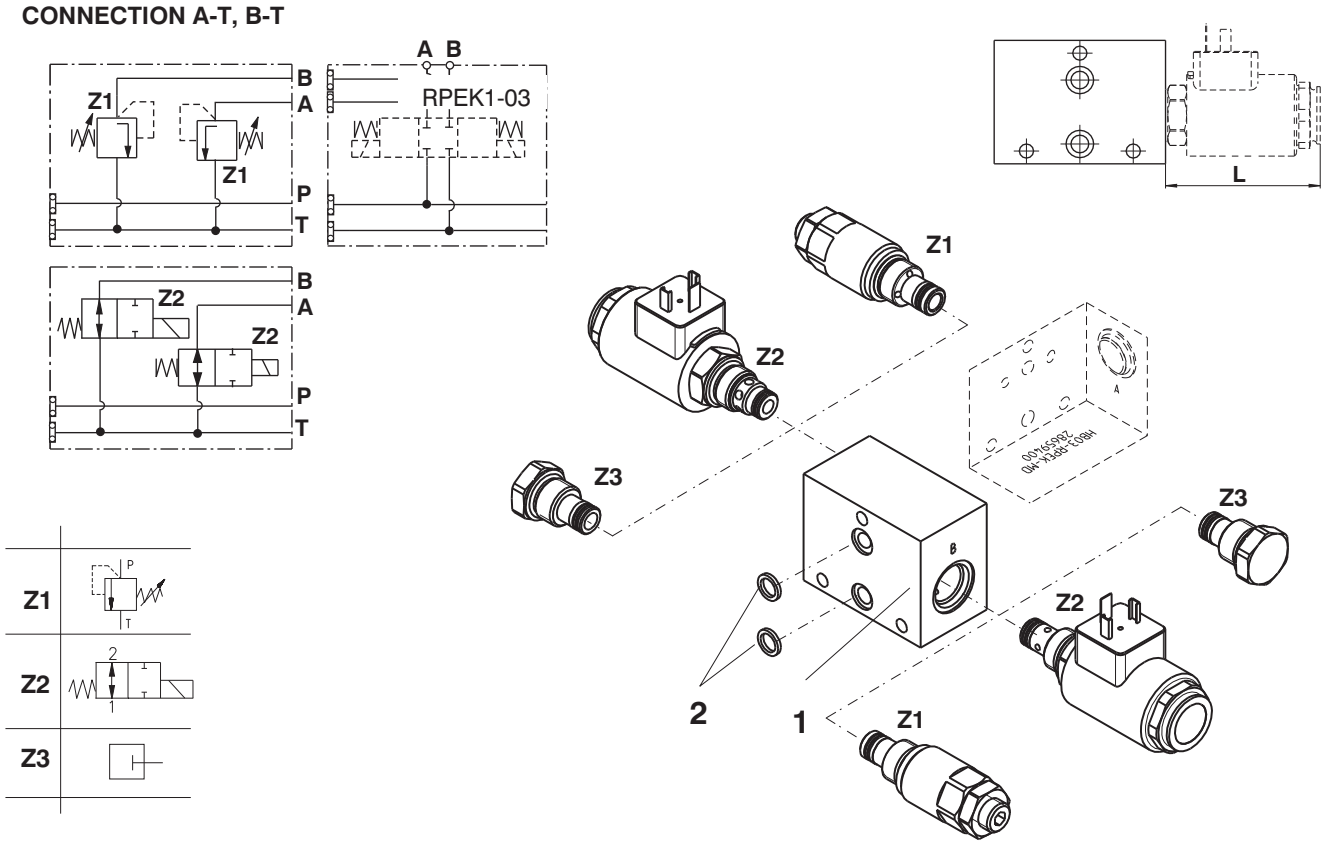

Pos.	Name	Type	Max. L [mm (in)]	Weight [kg (lb)]	Data sheet	Ordering number
1	Sandwich Plate + seals	HB03-RPEK-MD		0,378(0.833)		28659400
Z1	Pressure valve	SR1A-A2	49,5 (1.95)		HA 5063	
Z2	Directional valve	SD2E-A2	70 (2.75)		HA 4040	
Z3	Plug 3/4-16UNF		7,5 (0.29)			15960800
2	**Spare Seal kit- Square ring**					
	Standard - NBR70	9,25 x 1,68 (2 pcs.)				15608800
	Viton	9,25 x 1,78 (2 pcs.)				20152400

Valve Dimensions - MD

Dimensions in millimeters (inches)

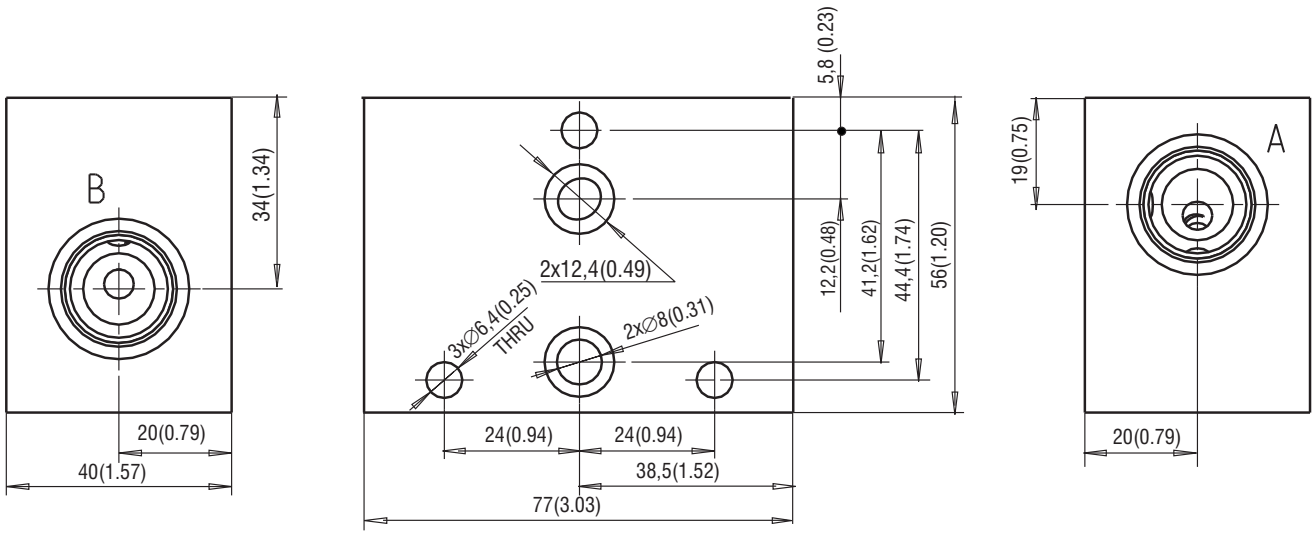

Cavity: 2/2 way 3/4-16 UNF

Sandwich Plate HB03-RPEK-MAB/-(S) 28659700/(29344200)

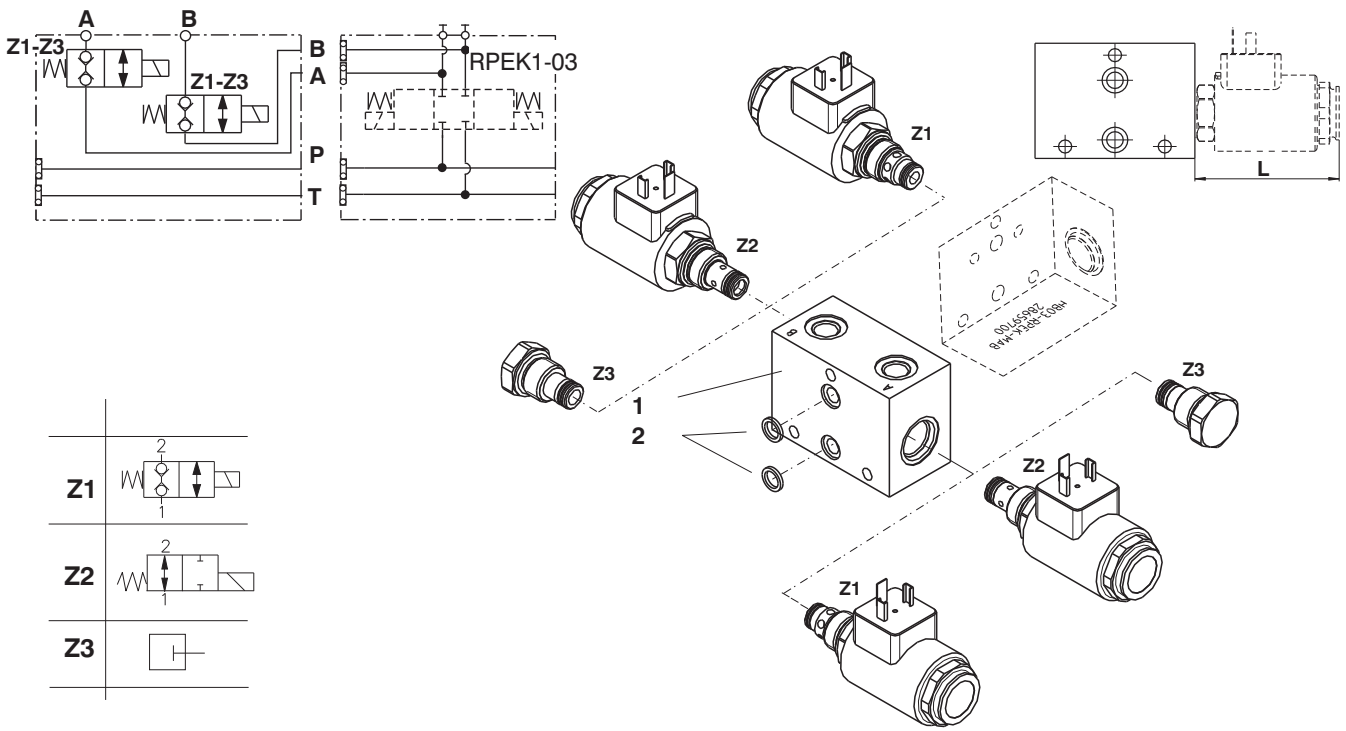

Pos.	Name	Type	Max. L [mm (in)]	Weight [kg (lb)]	Data sheet	Ordering number
1	Sandwich Plate + seals	HB03-RPEK-MAB		0,407(0.897)		28659700
		HB03-RPEK-MAB-S				29344200
Z1	Directional valve	SD3E-A2	70 (2.75)		HA 4043	
Z2	Directional valve	SD2E-A2	70 (2.75)		HA 4040	
Z3	Plug 3/4-16UNF		7,5(0.29)			15960800
2	**Spare Seal kit- Square ring**					
	Standard - NBR70	9,25 x 1,68 (2 pcs.)				15608800
	Viton	9,25 x 1,78 (2 pcs.)				20152400

Valve Dimensions - MAB/-(S)

Dimensions in millimeters (inches)

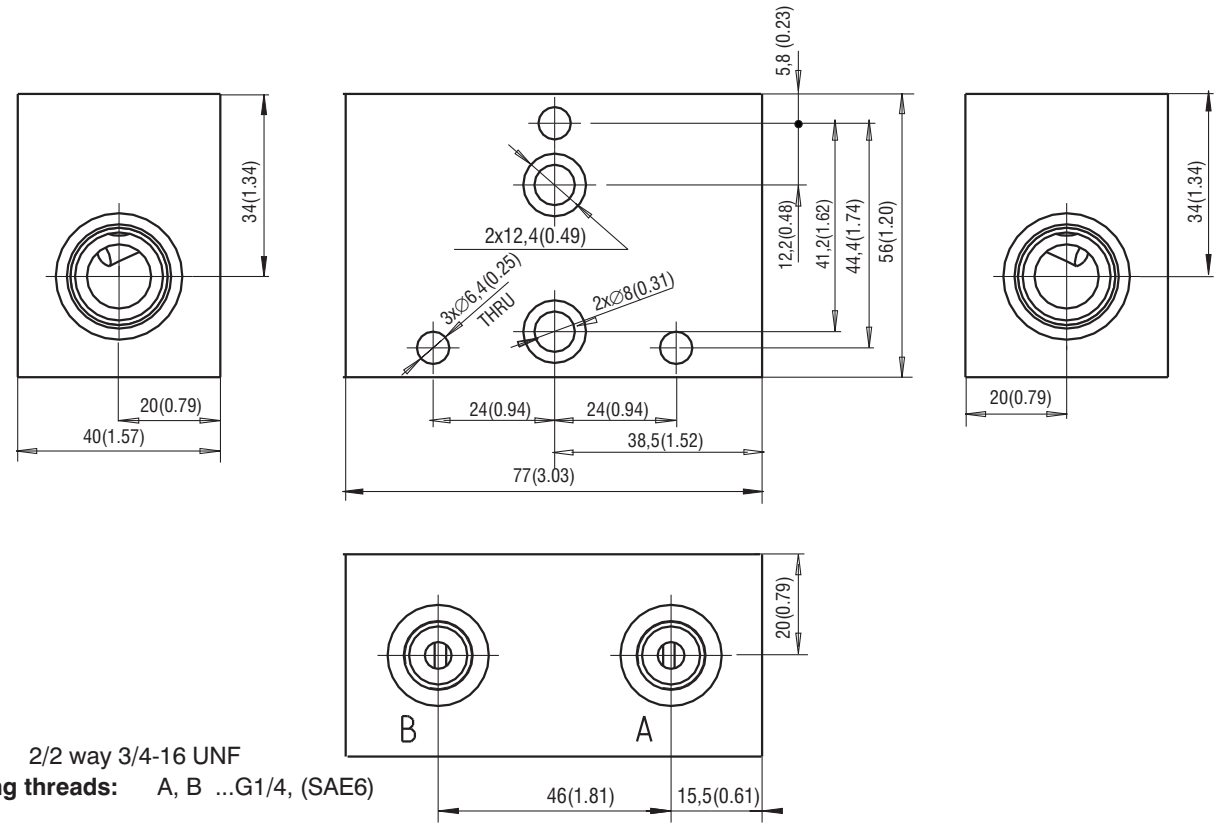

Cavity: 2/2 way 3/4-16 UNF

Connecting threads: A, B ...G1/4, (SAE6)

Sandwich Plate HB03-RPEK-MAB1/-(S) 28650700/(29344500)

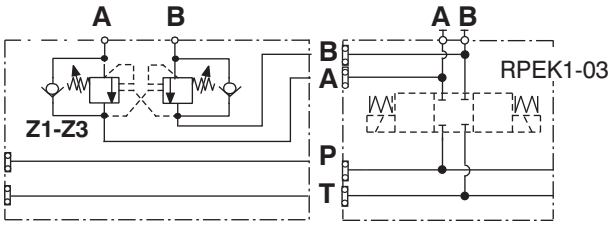

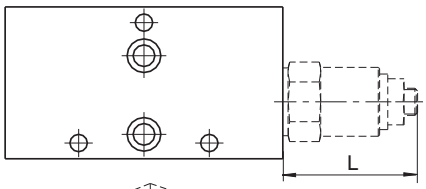

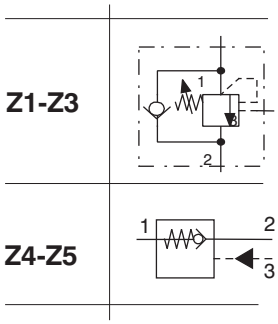

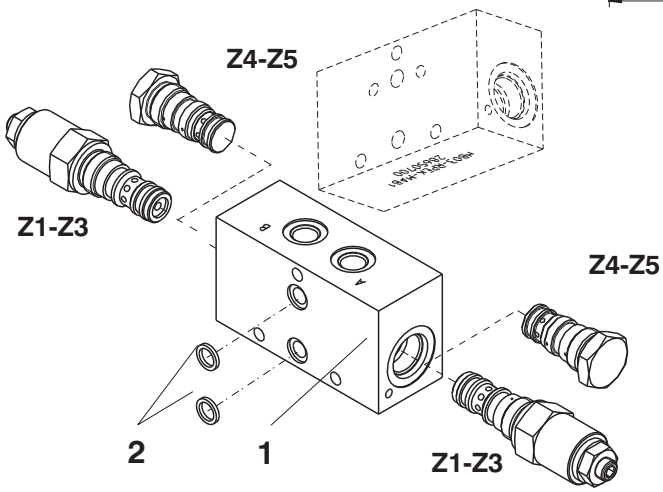

Pos.	Name	Type	Max. L [mm (in)]	Weight [kg (lb)]	Data sheet	Ordering number
1	Sandwich Plate +seals	HB03-RPEK-MAB1		0,532(1.173)		28650700
		HB03-RPEK-MAB1-S				29344500
Z1	Overcentre valve	SOPA-Q3	47 (1.85)		HA 5200	
Z2	Overcentre valve	SOP5A-Q3/I	47 (1.85)		HA 5201	
Z3	Overcentre valve	SOB5A-Q3/I	47 (1.85)		HA 5202	
Z4	Check valve	SC5H-Q3/I	7 (0.27)		HA 5217	
Z5	Check valve	SCC5H-Q3/I	7 (0.27)		HA 5221	
2	**Spare Seal kit- Square ring**					
	Standard - NBR70	9,25 x 1,68 (2 pcs.)				15608800
	Viton	9,25 x 1,78 (2 pcs.)				20152400

Valve Dimensions - MAB1/-(S)

Dimensions in millimeters (inches)

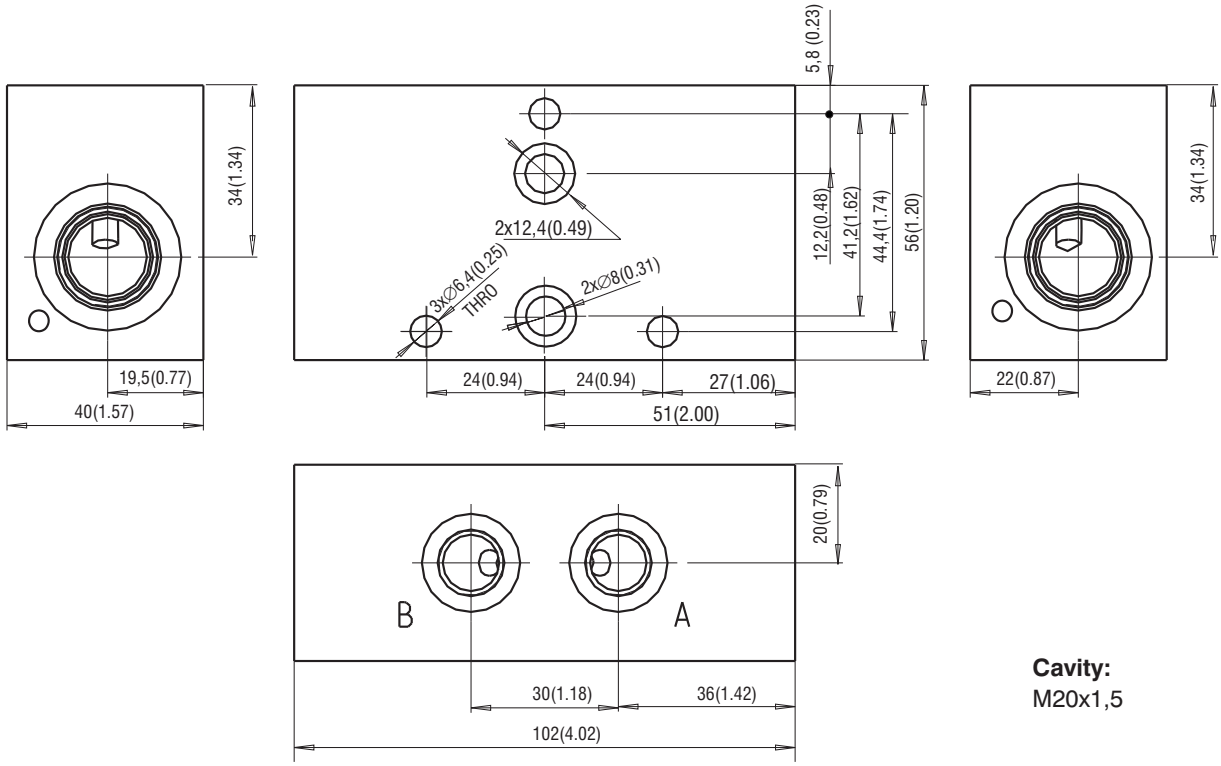

Cavity:
M20x1,5

Sandwich Plate HB03-RPEK-MAB2 29397800

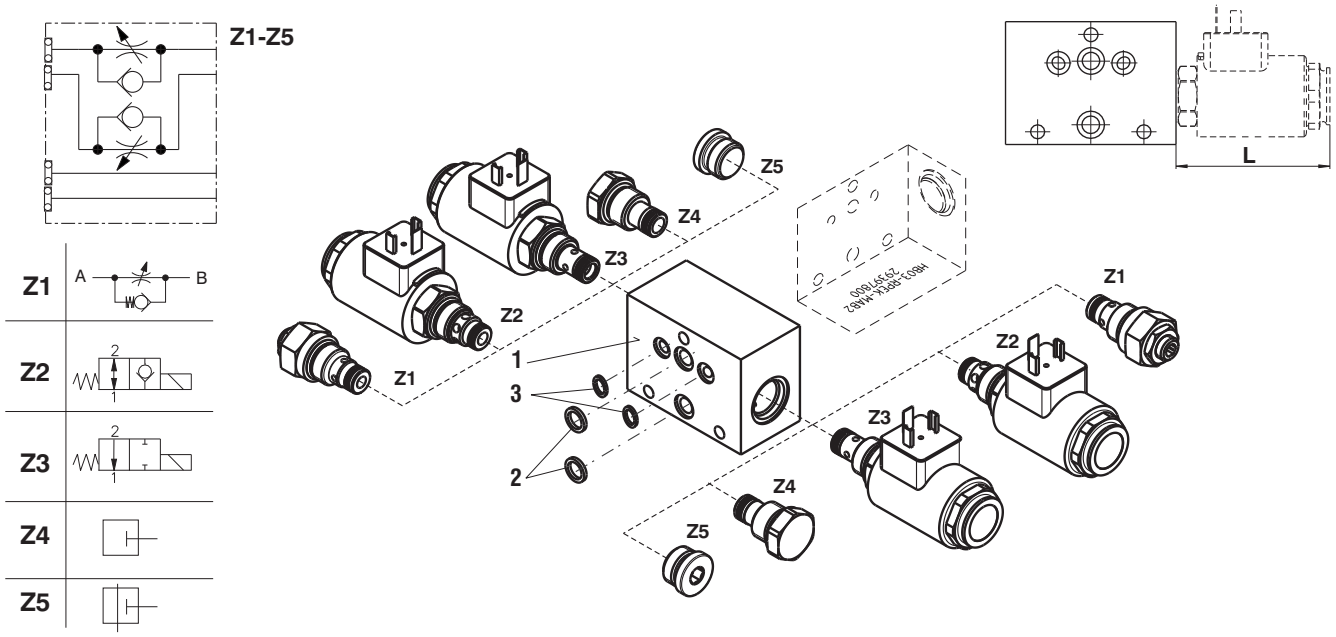

Pos.	Name	Type	Max. L [mm (in)]	Weight [kg (lb)]	Data sheet	Ordering number
1	Sandwich Plate +seals	HB03-RPEK-MAB2		0,415(0.915)		29397700
Z1	Flow valve	VSV2-J1-3/4-16UNF	22 (0.87)		HA 5132	29399300
Z2	Directional valve	SD3E-A2	70 (2.75)		HA 4043	
Z3	Directional valve	SD2E-A2	70 (2.75)		HA 4040	
Z4	Plug 3/4-16UNF		7,5 (0.29)			15960800
Z5	Plug 3/4-16UNF		3 (0.12)			17250900
2	**Spare Seal kit- Square ring**					
	Standard - NBR70	9,25 x 1,68 (2 pcs.)				15608800
	Viton	9,25 x 1,78 (2 pcs.)				20152400
3	DKAR 00011BN7033	7,65 x 1,68 (2 pcs.)				15608700

Valve Dimensions - MAB2

Dimensions in millimeters (inches)

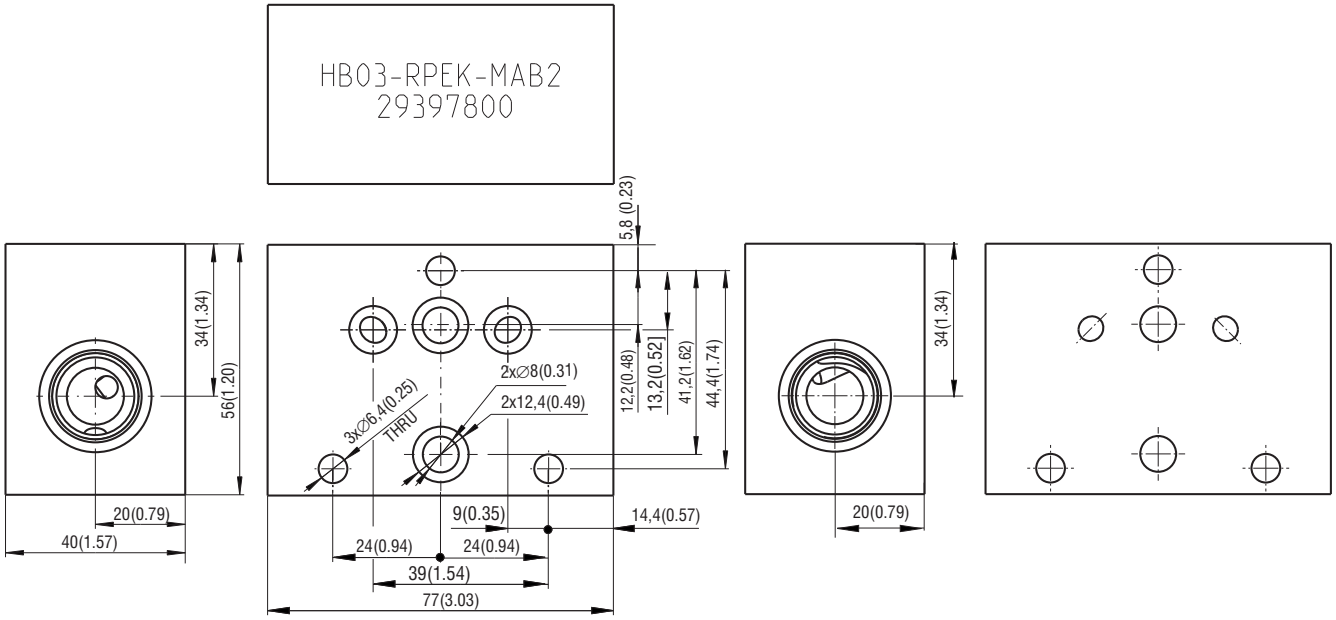

Cavity: 2/2 way 3/4-16 UNF

Mounting Angle

Dimensions in millimeters (inches)

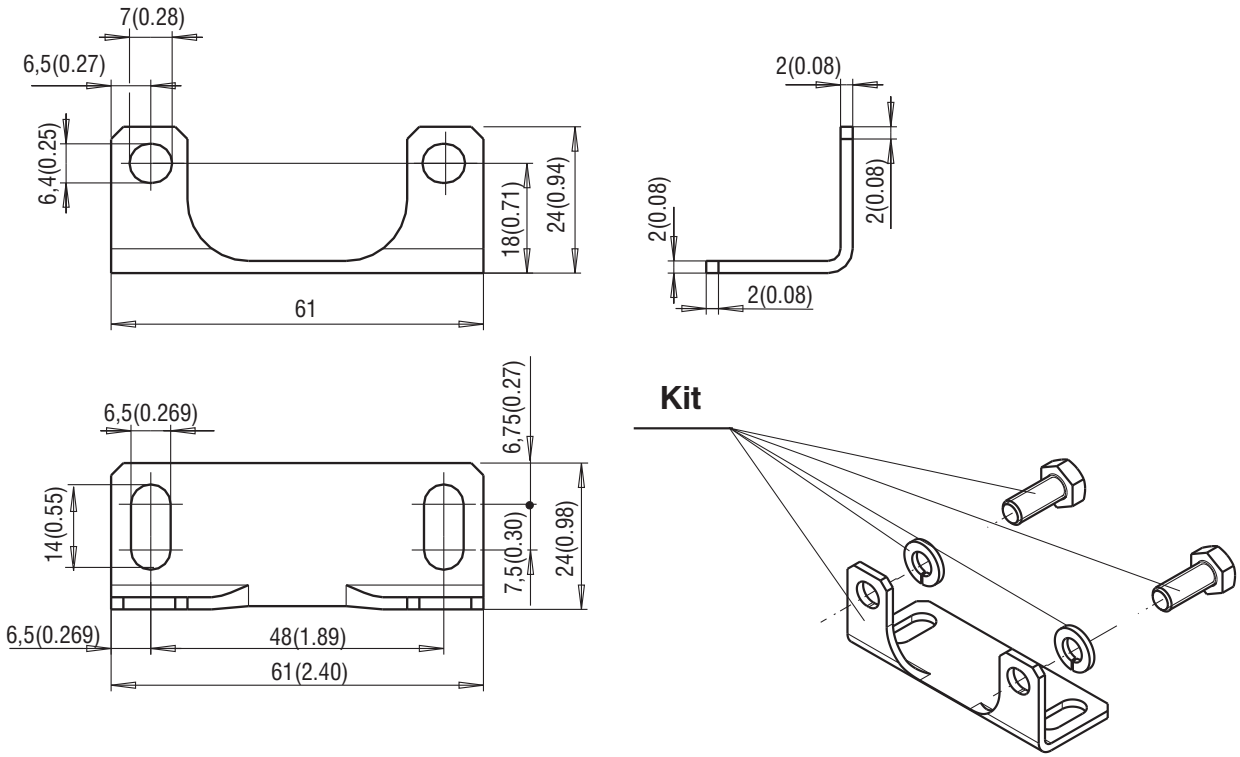

Name		Tightening torque	Ordering number / Kit
Kit	Mounting Angle (1 pc.)	12 (8.85) [Nm (lbf-ft)]	28799600
	Bold M6 x 12 (2 pcs.)		
	Washer 6 (2 pcs.)		

Spare Parts - Plates

Seal kit - Square ring

Name	Dimensions, number	Ordering number
Standard - NBR70	9,25 x 1,68 (2 pcs.)	15608800
Viton	9,25 x 1,78 (2 pcs.)	20152400

M6 BOLTS/STUDS LENGTH – for Horizontal Assembly (**Mu** -12 (8.85)[Nm (lbf-ft)])

L = (L1 x X) + (L2 x X) + (L3 x X) + Y

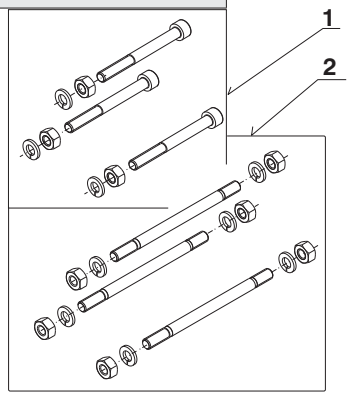

L = **total length** (to 100 cm screw bolt hereinafter)
L1 = 40 mm (1.57 in) (Horizontal plate with lenght 40 mm (1.57 in))
L2 = 31 mm (1.22 in) (Horizontal plate with lenght 31 mm (1.22 in))
L3 = 14 mm (0.55 in) (End plate)
X = Number of plates of the given width (see page 3)
Y = 14 mm (0.55 in) **for bolts**
- Additional length of bolt thread used for nuts mounting

25 mm (0.98 in) **for studs**
- Additional length of bolt thread used for nuts mounting

L [mm (in)]	Ordering number / Kit	L [mm (in)]	Ordering number / Kit
1 -BOLTS		**2 - STUDS**	
45 (1.772)	29204400	199 (7.835)	29207300
60 (2.362)	29204600	203 (7.992)	29207400
75 (2.953)	29204800	209 (8.228)	29207500
85 (3.346)	29205000	219 (8.622)	29207600
100 (3.937)	29205100	224 (8.819)	29207700
2 - STUDS		229 (9.015)	29207800
109 (4.291)	29205300	236 (9.291)	29207900
115 (4.527)	29205400	245 (9.646)	29208000
125 (4.921)	29205500	253 (9.961)	29208100
133 (5.24)	29205600	256 (10.078)	29208300
136 (5.35)	29205700	259 (10.197)	29208400
143 (5.630)	29205800	265 (10.433)	29208500
147 (5.787)	29205900	273 (10.748)	29208600
152 (5.984)	29206000	279 (10.984)	29208700
157 (6.181)	29206200	287 (11.299)	29208800
163 (6.417)	29206300	295 (11.614)	29208900
167 (6.575)	29206400	300 (11.811)	29209000
172 (6.772)	29206900	309 (12.165)	29209100
179 (7.047)	29207000	314 (12.362)	29209200
187 (7.362)	29207100	320 (12.59)	29209300
194 (7.638)	29207200	328 (12.913)	29209400

Note:
Select the bolt or screw length according to the nearest dimension available in the table.

Vertical Assembly Ilustrative Figure

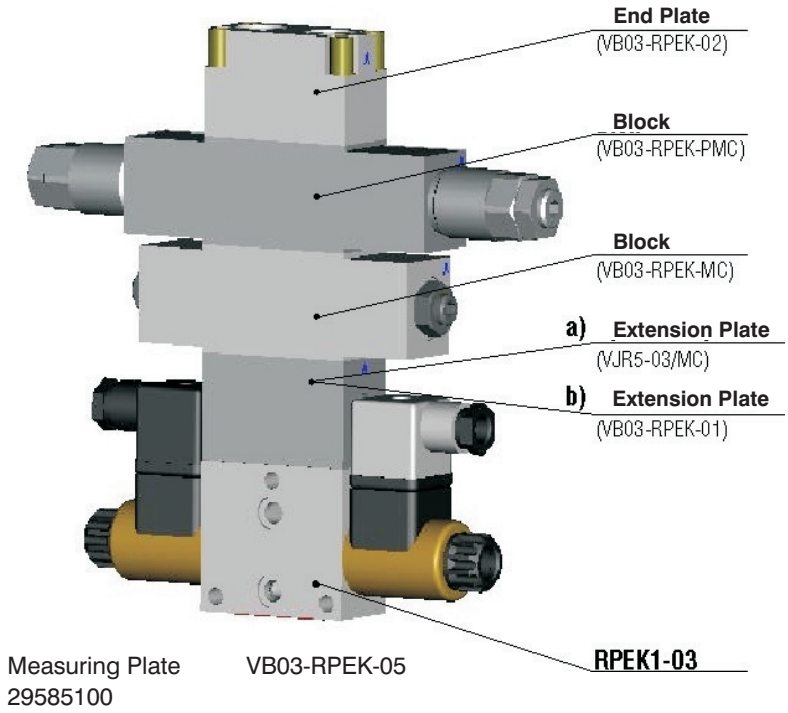

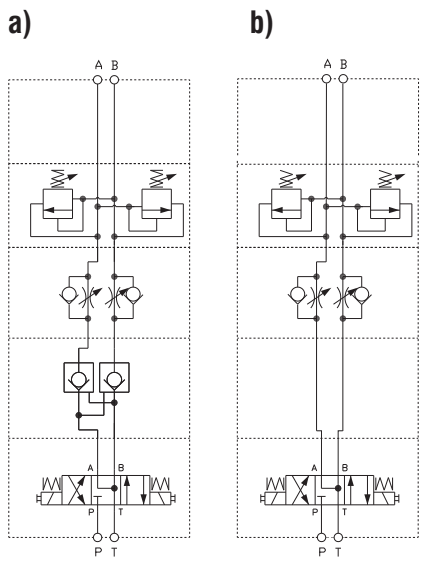

VERTICAL ASSEMBLY

1- 4 Section

Type	Cavity	Connecting threads	Ordering number	Page	Description (to select the studs)
Extension Plate					
VB03-RPEK-**01**			28131500	35	L1=40 mm (1.57 in)
Pilot Operated Check Valve					
VJR5-03	Dn 03	Katalog HA 5027		36	L1=40 mm (1.57 in)
Vertical Sandwich Plate with Valves					
VB03-RPEK-**PMC**	2/2 - 3/4-16UNF		28672700	37	L1=40 mm (1.57 in)
VSVJ1-03/**MC**	M12x1		28672500	38	L1=40 mm (1.57 in)
VSVJ1-03/**MD**	M12x1		28672400	39	L1=40 mm (1.57 in)
Cover Plate - A,B Ports					
VB03-RPEK-**02**		A,B - G1/4	28130400	40	L2=26 mm (1.02 in)
VB03-RPEK-**02-S**		A,B - SAE 6		40	L2=26 mm (1.02 in)
VB03-RPEK-**03**		A,B - G1/4 - side	28476200	41	L2=26 mm (1.02 in)
VB03-RPEK-**03-S**		A,B - SAE 6 - side	29009000	41	L2=26 mm (1.02 in)
VB03-RPEK-**04**		A,B - G3/8 - side	28672900	41	L2=26 mm (1.02 in)
Measuring Plate - A,B Ports					
VB03-RPEK-**05**		A,B - G1/4	29585100	40	L2=26 mm (1.02 in)

Extension Plate VB03-RPEK-01 28131500

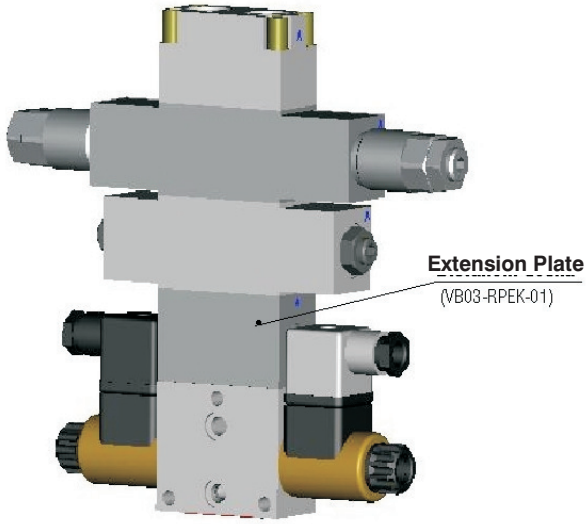

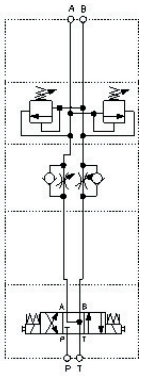

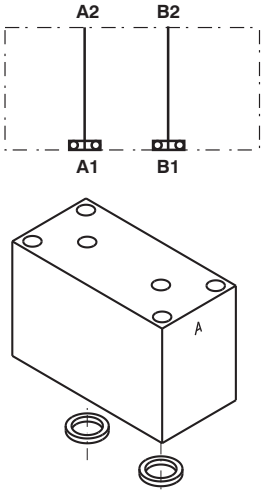

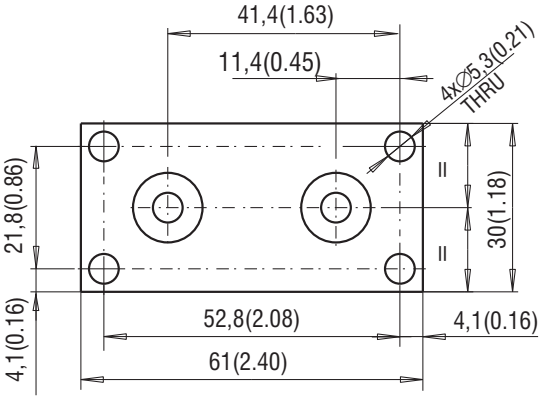

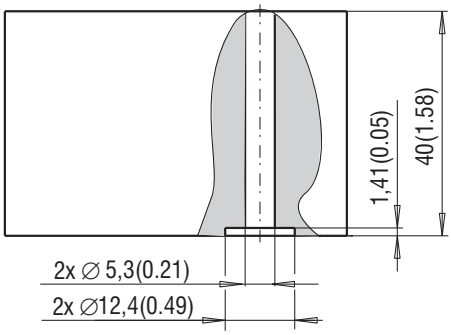

Dimensions in millimeters (inches)

The application of a extension plate is required only in vertical assembly situation in case no Pilot Operated Check valve is used and is required a free space for electrical connectors of RPEK directional valve (see example of assembly in picture).

Name	Type	Port size		Ordering number	Weight [kg (lb)]
		A	B		
Extension Plate+ seals	VB03-RPEK-01	-	-	28131500	0,189 (0.436)

Pilot Operated Check Valve HA 5027

VJR5-03/MA

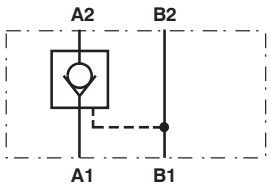

VJR5-03/MB

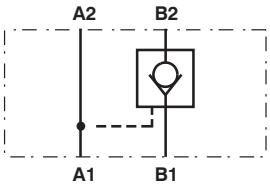

VJR5-03/MC

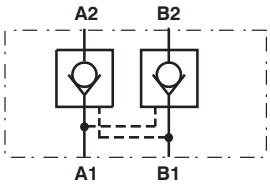

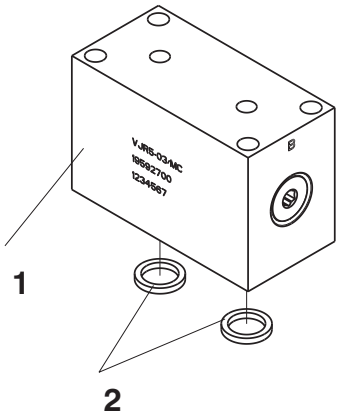

Pos.	Name	Type	Weight [kg (lb)]	Data sheet	Ordering number
1	Hydraulic lock + seals	VJR5-03/Mx	0,2 (0.441)	HA 5027	
2	**Spare Seal kit**	**Square ring**	**O-ring**		
	Standard - NBR70	9,25 x 1,68 (2 pcs.)	4,47 x 1,78 (2 pcs.)		28407200
	Viton	-	9,25 x 1,78 (2 pcs.) 4,47 x 1,78 (2 pcs.)		28407300

Valve Dimensions

Dimensions in millimeters (inches)

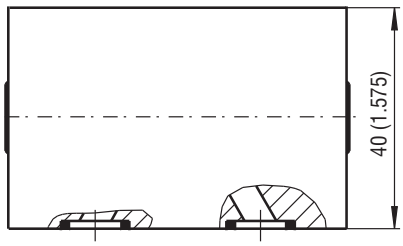

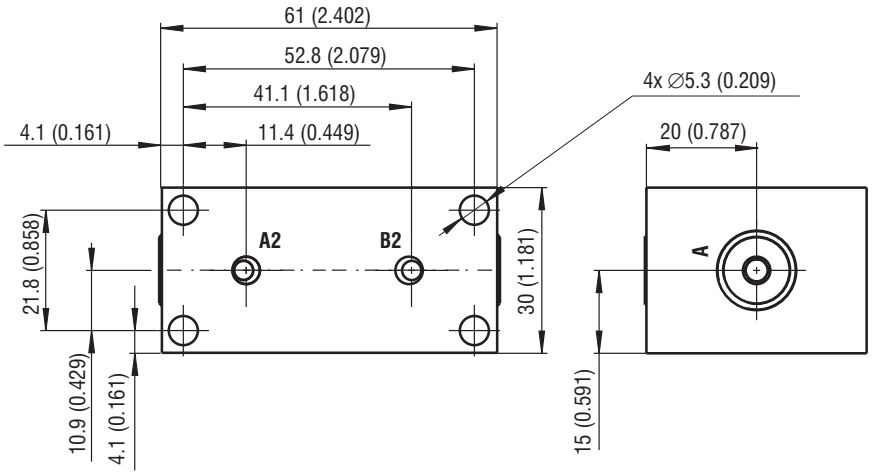

Sandwich Plate VB03-RPEK-PMx 28672700

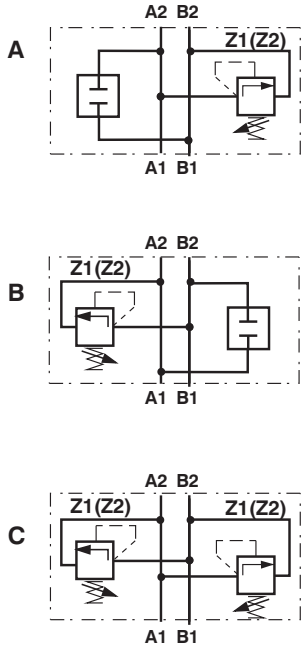

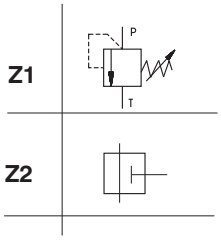

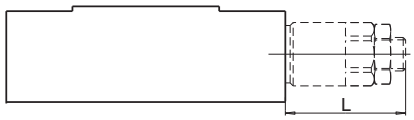

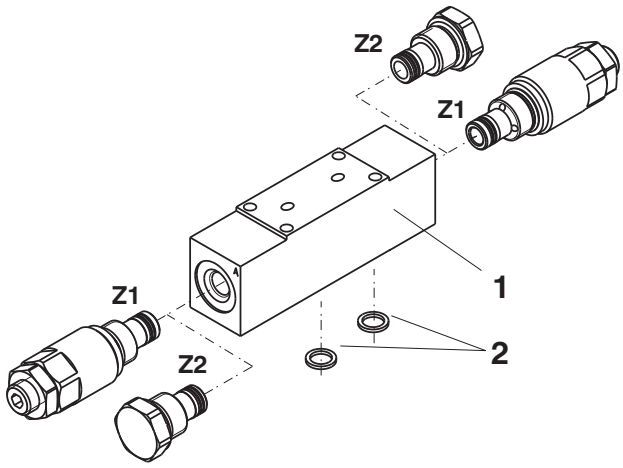

Pos.	Name	Type	Max. L [mm (in)]	Weight [kg (lb)]	Data sheet	Ordering number
1	Sandwich plate +seals	VB03-RPEK-PMx		0,349 (0.769)		28672700
Z1	Pressure valve	SR1A-A2	78 (3.07)		HA 5063	
Z2	Plug 3/4-16UNF		7,5 (0.29)			15960800
2	**Spare Seal kit- Square ring**					
	Standard - NBR70	9,25 x 1,68 (2 pcs.)				15608800
	Viton	9,25 x 1,78 (2 pcs.)				20152400

Valve Dimensions - PMC

Dimensions in millimeters (inches)

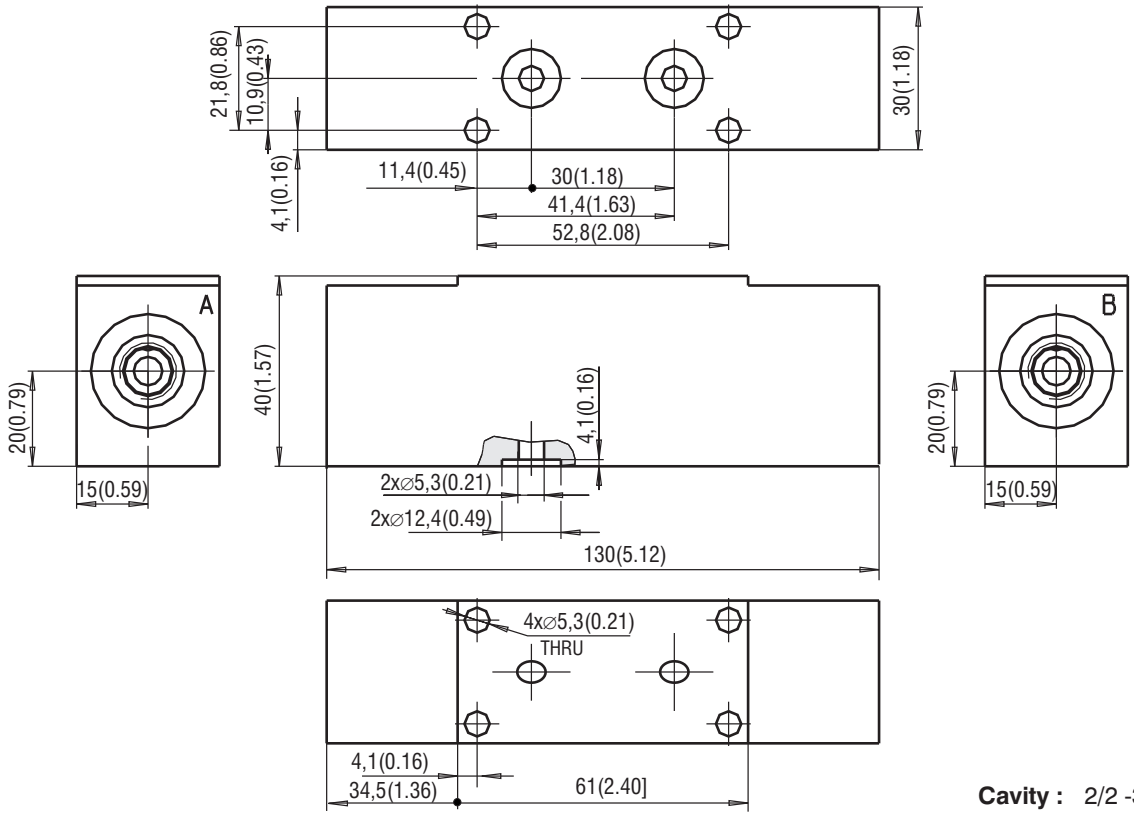

Cavity : 2/2 -3/4/16UNF

Sandwich Plate VB03-RPEK-Mx 28672500

Screw-in Cartridge Throttle Valve with Bypass Check Valve

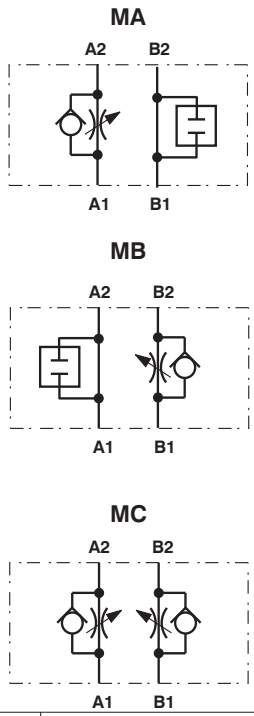

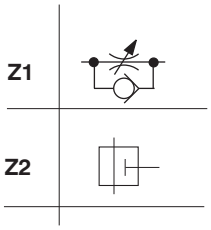

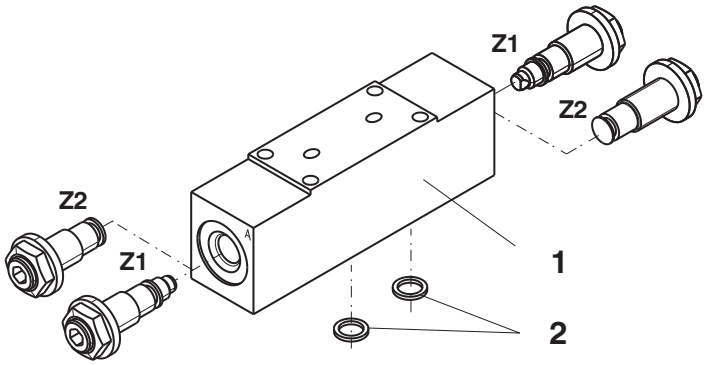

Pos.	Name	Type	Max. L [mm (in)]	Weight [kg (lb)]	Data sheet	Ordering nummer
1	Sandwich plate+seals	VB03-RPEK-MC		0,361(0.795)		28672500
Z1	Flow valve	VSV2 (only model **-1**, **- J1**)	11 (0.43)		HA 5132	
Z2	Plug	VSV/ M12x1	11 (0.43)			22727000
2	**Spare Seal kit- Square ring**					
	Standard - NBR70	9,25 x 1,68 (2 pcs.)				15608800
	Viton	9,25 x 1,78 (2 pcs.)				20152400

Valve Dimensions - MC

Dimensions in millimeters (inches)

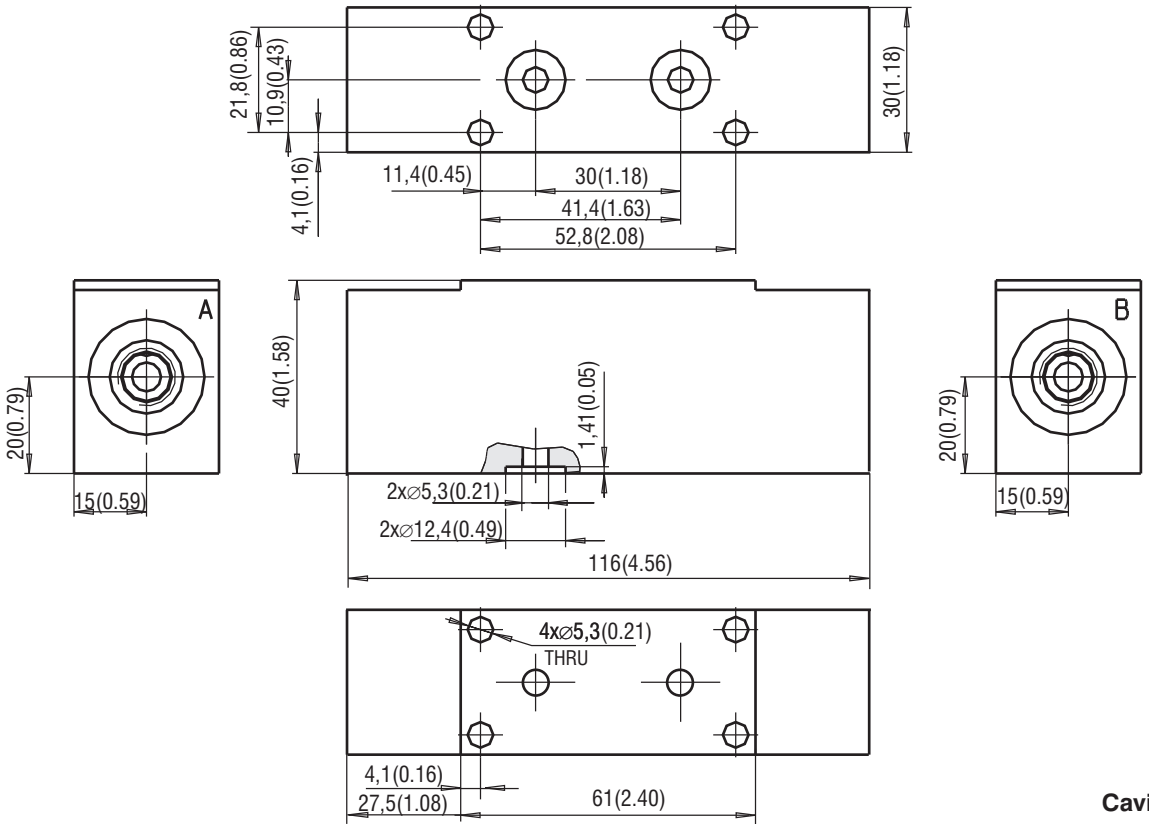

Cavity: M12x1

Sandwich Plate VB03-RPEK-Mx 28672400

Screw-in Cartridge Throttle Valve with Bypass Check Valve

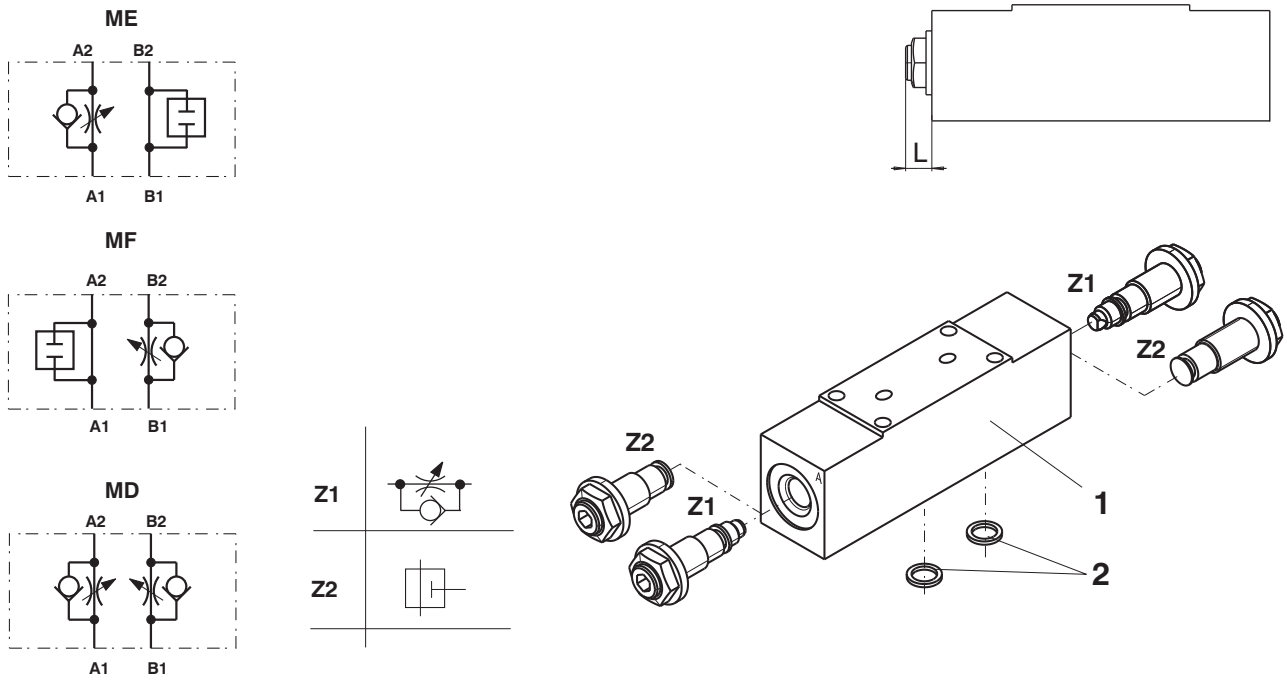

Pos.	Name	Type	Max. L [mm (in)]	Weight [kg (lb)]	Data sheet	Ordering nummer
1	Sandwich plate +seals	VB03-RPEK-MD		0,361(0.795)		28672400
Z1	Flow valve	VSV2 (only model **-1**, **- J1**)	11 (0.43)		HA 5132	
Z2	Plug	VSV/ M12x1	11 (0.43)			22727000
2	**Spare Seal kit- Square ring**					
	Standard - NBR70	9,25 x 1,68 (2 pcs.)				15608800
	Viton	9,25 x 1,78 (2 pcs.)				20152400

Valve Dimensions - MD

Dimensions in millimeters (inches)

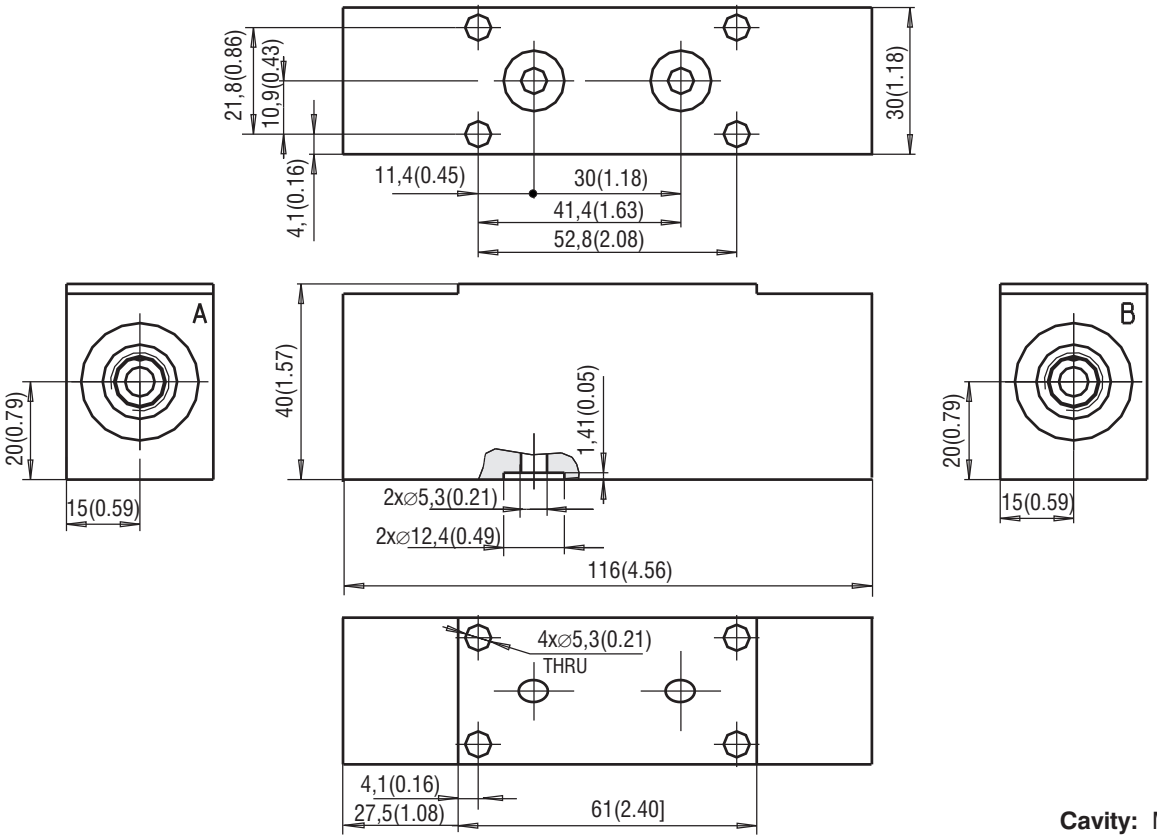

Cavity: M12x1

Cover Plate VB03-RPEK-02- /(S) 28130400/(29008900)

VB03-RPEK-02

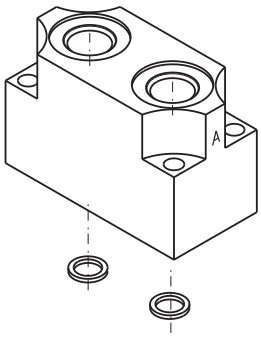

VB03-RPEK-02-S

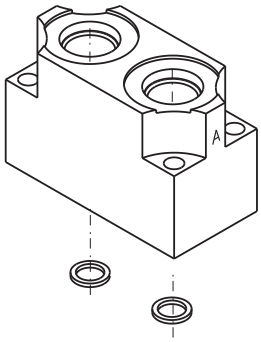

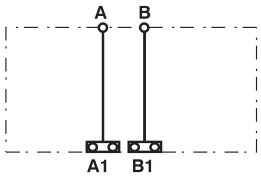

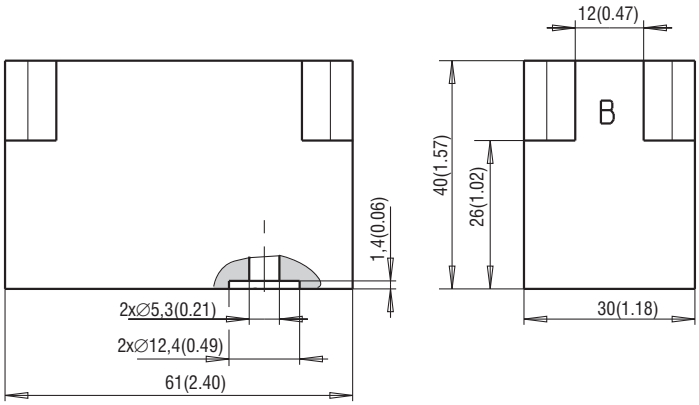

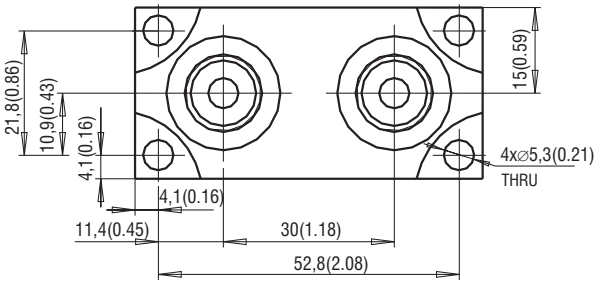

VB03-RPEK-02

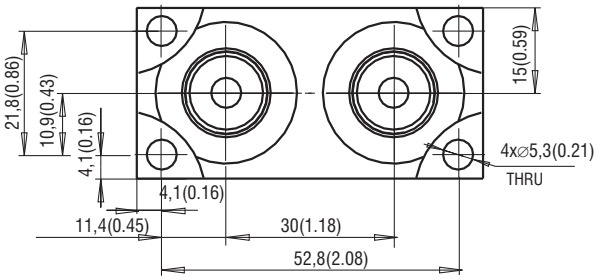

VB03-RPEK-02-S

Dimensions in millimeters (inches)

Connecting threads: : A, B ... G1/4 (SAE6)

Name	Type	Port size		Ordering number	Weight [kg (lb)]
		A	B		
Cover plate + seals	VB03-RPEK-02	G1/4	G1/4	28130400	0,172 (0.379)
	VB03-RPEK-02-S	SAE 6	SAE 6	29008900	

Cover Plate VB03-RPEK-03-/(S) 28476200/(29009000)

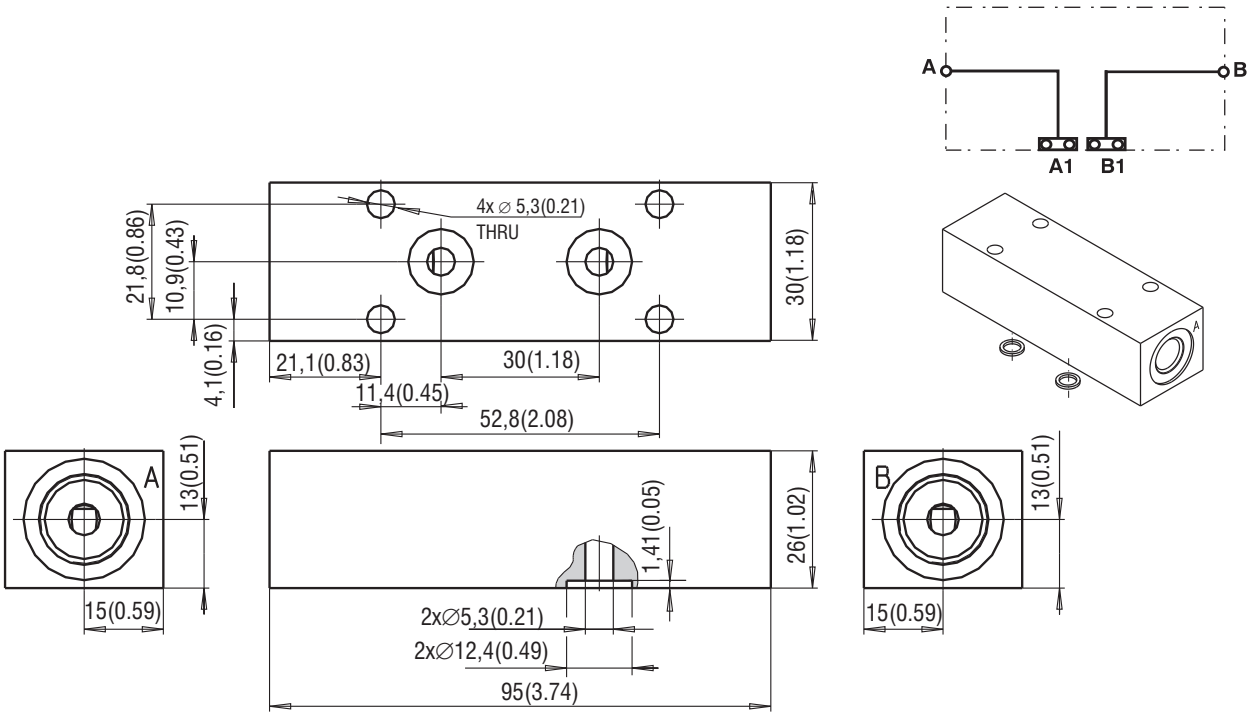

Dimensions in millimeters (inches)

Connecting threads: A, B ... G1/4 (SAE 6)

Cover Plate VB03-RPEK-04 28672900

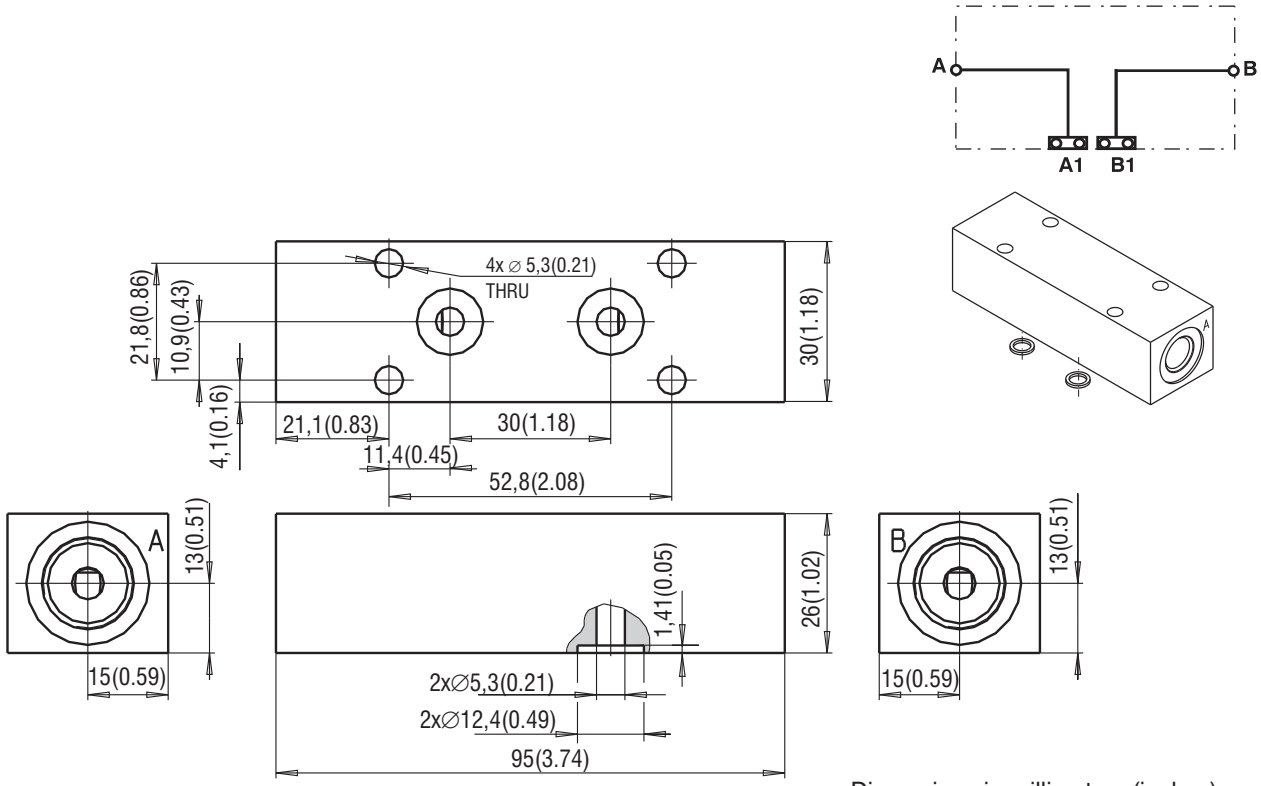

Dimensions in millimeters (inches)

Connecting threads: A, B ... G 3/8

Name	Type	Port size		Ordering number	Weight [kg (lb)]
		A	B		
Cover plate +seals	VB03-RPEK-03	G1/4	G1/4	28476200	0,131 (0.289)
	VB03-RPEK-03-S	SAE 6	SAE 6	29009000	
Cover plate +seals	VB03-RPEK-04	G3/8	G3/8	28672900	0,177 (0.390)

Measuring Plate VB03-RPEK-05 29585100

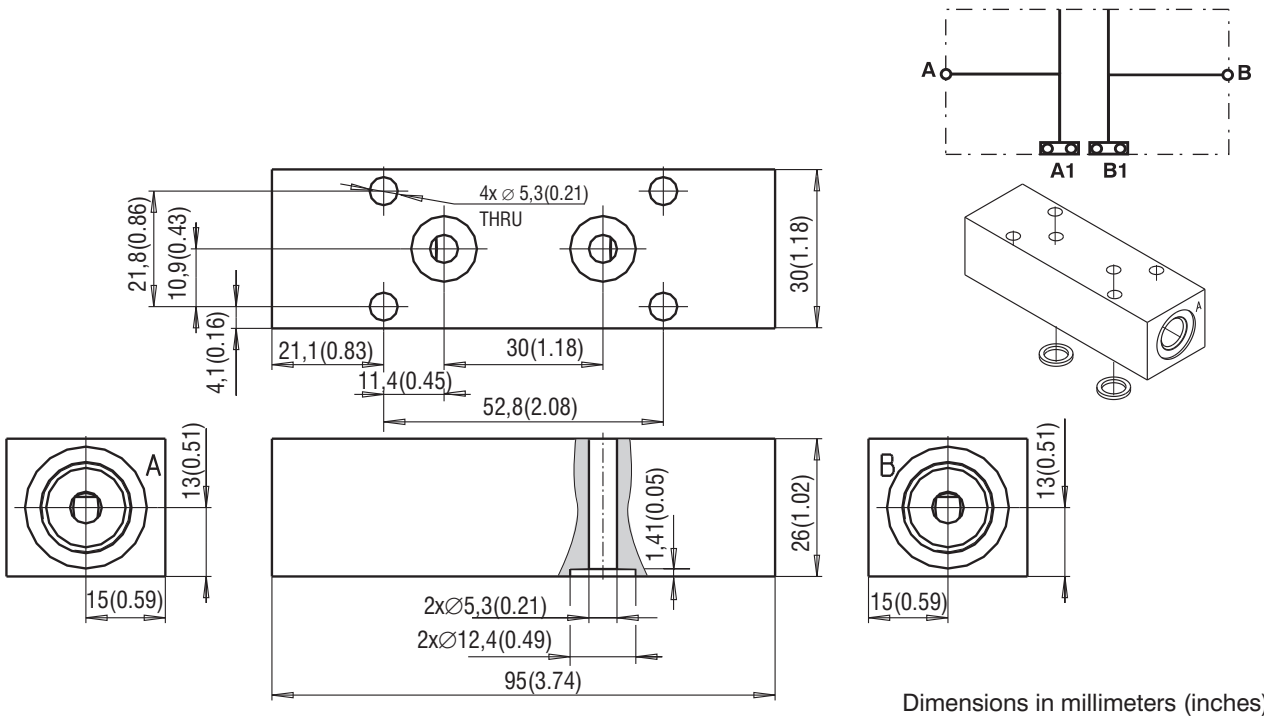

Dimensions in millimeters (inches)

Connecting threads: A, B ... G1/4

Name	Type	Port size		Ordering number	Weight [kg (lb)]
		A	B		
Measuring plate +seals	VB03-RPEK-05	G1/4	G1/4	29585100	0,177 (0.390)

Spare Parts - Plates

Seal kit - Square ring

Name	Dimensions, number	Ordering number
Standard - NBR70	9,25 x 1,68 (2 pcs.)	15608800
Viton	9,25 x 1,78 (2 pcs.)	20152400

M5 SCREWS LENGTH – for Vertical Assembly (**Mu** - 5(3.69) [Nm (lbf-ft)])

L = (L1 x X) + L2 + 9

L = total length
L1 = 40 mm (1.57 in) (Vertical plates with hight 40 mm (1.57 in))
L2 = 26 mm (1.02 in) (Vertical plates with hight 26 mm (1.02 in))
X = Number of plates of the given width (see page 3)

L [mm (in)]	Ordering number/Kit (4x bolts)
75 (2.952)	29245200
115 (4.527)	29245300
155 (6.102)	29245400

Note:
Select the bolt or screw length according to the nearest dimension available in the table.

ARGO-HYTOS s.r.o CZ - 543 15 Vrchlabí
tel.: 499 403 111
e-mail: info.cz@argo-hytos.com
www.argo-hytos.com

Subject to alteration without!