FNAPC1 045

With oil condition monitoring · Nominal flow rate up to 45 l/min / 12 gpm · Operating pressure up to 7 bar / 101 psi

Off-line Filter Unit FNAPC1 045

OPCom Particle Monitor

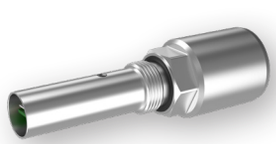

LubCos Humidity / Oil Condition Sensor

Description

Application

In the by-pass flow of hydraulic and lubrication systems.

Performance features

Protection against wear:
The EXAPOR®MAX 2 ultra-fine element meets the highest cleanliness standards, even at full flow. A high separation efficiency and excellent dirt holding capacity guarantee maximum protection of the machine and make the FNAPC1 045 an economical choice for our customers.

Filtration with oil condition monitoring:
In addition to efficient filtration, the FNAPC1 045 provides continuous oil condition monitoring. This functionality significantly increases the reliability and productivity of the hydraulic system.
The unit can be equipped with one or two sensors:
The OPCom particle sensor permanently monitors the current oil cleanliness class.
The second sensor can be supplied in two versions.
The humidity sensor LubCos H_20 measures the temperature and the relative humidity of the oil.
In the version with LubCos H_2O+ II, the relative humidity, temperature, permittivity and conductivity are issued. This sensor is prepared for continuous determination of the oil condition. Thereby damages can be detected early or avoided completely. This offers the opportunity to prevent machine failures and to extend maintenance and oil change intervals.

Special design features

Housing cover:
Fold-out handles at the cover facilitate the opening.

Compact:
The filter housing, the internal gear pump and the electric motor are screwed together to form one unit. Apart from the connecting lines to the sensor block and the suction/pressure hose, no pipes are needed.

Dirt retention valve:
At the bottom of the filter element, flown through from the inside to the outside, there is a dirt retention valve. This closes while pulling the filter element, which is hung up at the cover, out of the housing. Sedimented dirt is removed together with the filter element. Because of the cover design, the filter element change can be carried out almost without losing any oil.

Switching valve:
The switching valve is used to switch between the basic modes of operation: "filtering" and "pumping without filtering".

Filter elements

Flow direction from the inside to the outside. The star-shaped pleating of the filter material results in:

- large filter surfaces
- low pressure drop
- high dirt-holding capacities
- particularly long maintenance intervals

Materials

Pump:	Cast iron, steel
Filter housing:	Aluminum alloy, painted RAL 5015
Cover:	Aluminum alloy
Seals:	NBR (FPM on request)
Filter media:	EXAPOR®MAX 2 - inorganic, multi-layer microfiber web EXAPOR®AQUA - combination of water absorbing filter layers and inorganic, multi-layer microfiber web

Remarks

Other colors of the filter housing are available on request.

Accessories

Electrical and / or optical clogging indicators may be ordered together with the off-line filter unit. For choosing the proper clogging indicator see table "Clogging Indicator" in the Ordering Code. A separate ordering of the clogging indicator is possible.
For dimensions and technical data of the clogging indicator, please refer to catalog sheets 60.20 and 60.30.

Characteristics

Nominal flow rate

Up to 45 l/min at ν = 35 mm²/s /
up to 12 gpm at ν = 162 SUS

Connection

Threaded port according to ISO 228
(see Dimensions - drawing)

Filter fineness

3 µm(c) ... 10 µm(c) with EXAPOR®MAX 2
separating solid particles
7 µm(c) with EXAPOR®AQUA
separating water and solid particles

Dirt-holding capacity

The dirt-holding capacity values in grams from the ISO MTD test dust are in accordance with the ISO 16889 requirements (see Ordering Code, table Filter Element).

Hydraulic fluids

Mineral oil and biodegradable fluids
(HEES and HETG, see info-sheet 00.20)

Temperature range of fluids

0 °C ... +65 °C / +32 °F ... +149 °F
(also see viscosity range)

Ambient temperature range

0 °C ... +50 °C / +32 °F ... +122 °F

Viscosity range*

Motor voltage	Continuous operation min.	Continuous operation max.	Short-term operation max.
3 ~ 400 V / 460 V	15 mm²/s / 70 SUS	250 mm²/s / 1160 SUS	800 mm²/s / 3720 SUS
1 ~ 230 V	15 mm²/s / 70 SUS	250 mm²/s 1160 SUS	800 mm²/s / 3720 SUS

* The maximum continuous viscosity for the filter unit itself is 600 mm²/s / 2790 SUS; an exact measurement of the oil cleanliness class is possible within a viscosity range from 15 mm²/s to 250 mm²/s / 70 SUS to 1160 SUS.

Maximum suction height

2 m / 6.6 ft - first use / unfilled
6 m / 20 ft - operating status

Operating pressure

Max. 7 bar / 101 psi,
pressure protection with pressure relief valve

Operating position

Vertical, pump block at the bottom

Recommended tank capacities

From 500 l up
For off-line filter units for smaller tank capacities see catalog sheet 80.40.

Ordering Code

FNAPC1 045 ____/____-____-____ ____

Type of filter unit	Code
Off-line filter unit with OPCom particle monitor*	FNAPC1

Nominal flow rate	Code
45 l/min / 11.9 gpm**	045

Filter element					Code
	Fineness (β=200) Dirt-holding capacity for nom. flow 45 l/min / 11.9 gpm		Water capacity	Spare filter element code	
EXAPOR®MAX 2	3 µm	1950 g	-	V7.1560-103	V003
EXAPOR®MAX 2	5 µm	1980 g	-	V7.1560-03	V005
EXAPOR®MAX 2	10 µm	2020 g	-	V7.1560-06	V010
EXAPOR®AQUA	7 µm	590 g	1520 ml	Y7.1560-05	Y007

Electric motor					Code
Phase(s), voltage	Frequency	Power	Rated current	Electrical connection	
3~400/460 VAC	50/60 Hz	1.1 kW**	4.8/2.8 A T/Y	1	40050
1~230 VAC	50/60 Hz	1.1 kW**	7.2 A	2	23050

Clogging indicator					Code
Type		Code of indicator	Connection	Datasheet number	
Differential pressure clogging indicator	optical	DG 042-04	Flange	60.30	OD
	electrical	DG 041-32	Flange	60.30	ED
	electrical+ optical	DG 041-32 DG 041.1200	Flange	60.30	EOD

Oil condition sensor			Code
Measured parameter	Code of sensor	Datasheet number	
Relative humidity Temperature	LubCos H_2O	100.00	H
Relative humidity Temperature Relative dielectric number Conductivity	LubCos H_2O+ II	100.05	HC
Without oil condition sensor			x

Type of monitoring	Hydraulic symbol	Code
Upstream (before filter)	1	
Downstream (after filter)	2	D

* The OPCom particle monitor is factory fitted in each version of the filter unit. The customer only needs to enter the oil condition sensor in the order code.
** Indications at 50 Hz. At 60 Hz, the value increases by approx. 20 %.

Order example:
FNAPC1 045V003/40050-ED-H off-line filter unit with OPCom particle monitor, 3 µm filter element, 3~phase electric motor, electrical differential pressure clogging indicator, humidity sensor LubCos H_2O. Monitoring type: before filter.

Remarks:
Combinations listed in this ordering code are standard units. If modifications are required, we kindly ask for your request.
For preferred types (available in short time), please refer to the table on the last page of this data sheet.

Dimensions

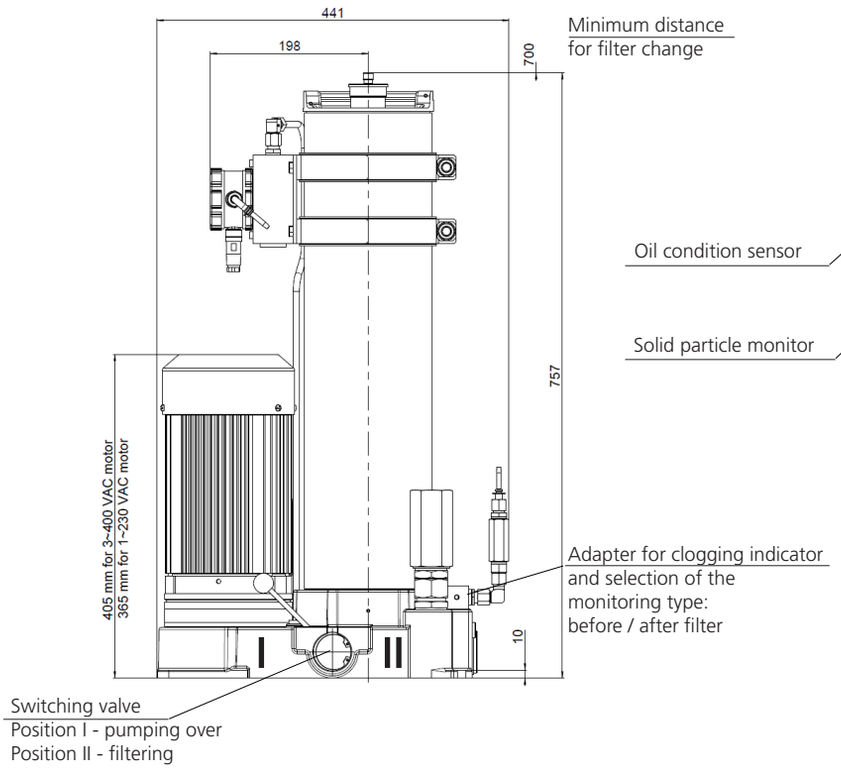

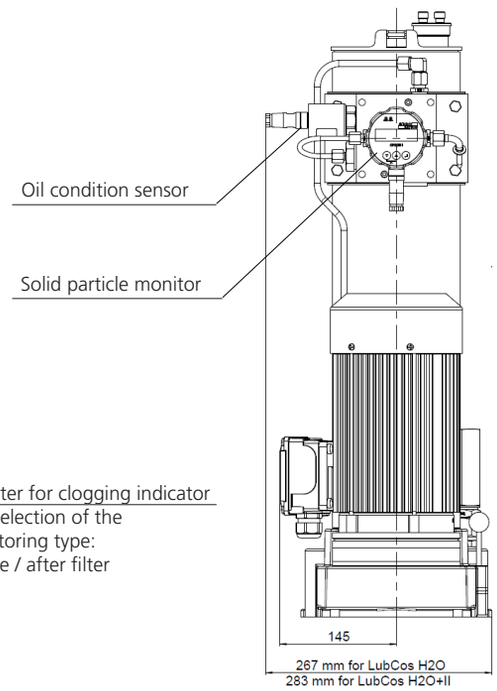

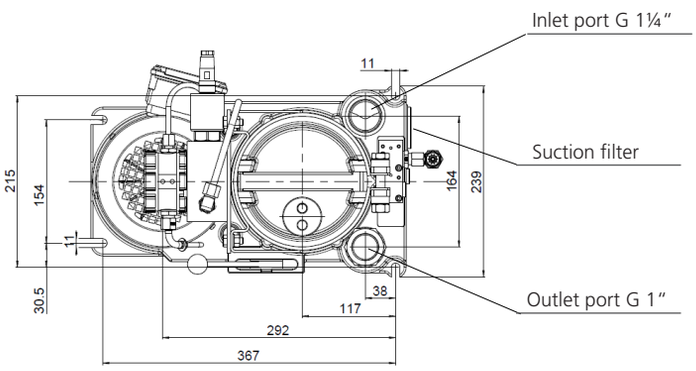

Weight approx. 45 kg / 99.2 lbs

Hydraulic symbols

1 - Measurement before filter

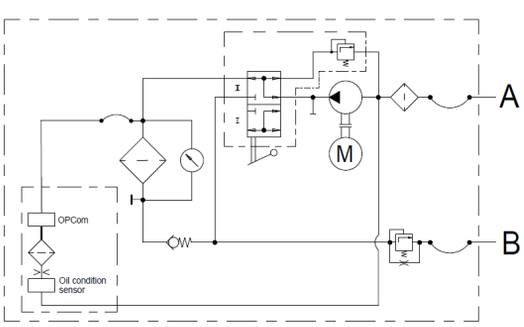

2 - Measurement after filter

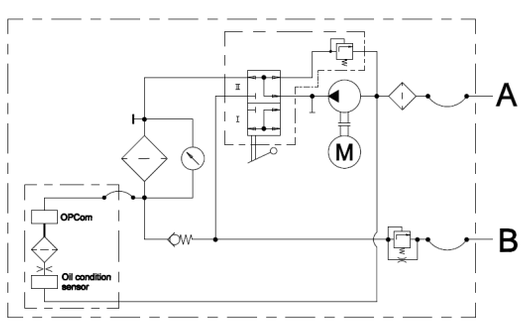

Electric connections

1

400/460 VAC, 3~phase motor

Delta connection

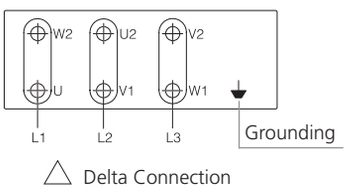

Star connection

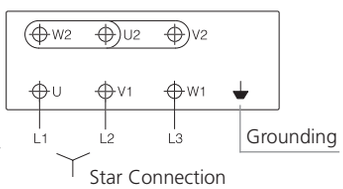

2

230 VAC, 1~phase motor

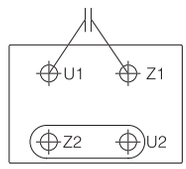

Preferred types

Order code	Filter fineness (β=200)	Dirt-holding capacity	Replacement filter element	Motor	Clogging indicator	Oil condition sensor	Hydraulic symbol	SAP number
FNAPC1-045V003/23050-OD-H	3 µm	1950 g	V7.1560-103	1~230 VAC	Optical	LubCos H_2O	1	42707200
FNAPC1-045V003/40050-OD-H	3 µm	1950 g	V7.1560-103	3~400/460 VAC	Optical	LubCos H_2O	1	42707000
FNAPC1-045V003/23050-ED-H	3 µm	1950 g	V7.1560-103	1~230 VAC	Electrical	LubCos H_2O	1	42707100
FNAPC1-045V003/40050-ED-H	3 µm	1950 g	V7.1560-103	3~400/460 VAC	Electrical	LubCos H_2O	1	42707300

Quality Assurance

Quality management according to DIN EN ISO 9001

To ensure constant quality in production and operation, ARGO-HYTOS filter elements undergo strict controls and tests according to the following ISO standards:

ISO 2941 Verification of collapse / burst pressure rating
ISO 2942 Verification of fabrication integrity (Bubble Point Test)
ISO 2943 Verification of material compatibility with fluids
ISO 3968 Evaluation of pressure drop versus flow characteristics
ISO 16889 Multi-Pass-Test (evaluation of filter fineness and dirt-holding capacity)
ISO 23181 Determination of resistance to flow fatigue using high viscosity fluid

Various quality controls during the production process guarantee the leak-free function and solidity of our filters.