ARGO HYTOS

Proportional Directional Control Valves

PRM7-10

Size 10 (D 05) • ... 350 bar (5076 PSI) • ...80 L/min (21 GPM)

HA 5116 2/2013

Replaces HA 5116 6/2012

- ❑ **Digital control**
- ❑ **Compact design**
- ❑ **Operated by proportional solenoids**
- ❑ **High sensitivity and slight hysteresis**
- ❑ **Installation dimensions to DIN 24 340 / ISO 4401 / CETOP RP121-H**

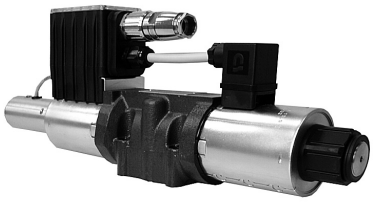

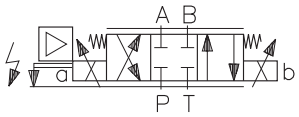

Functional Description

The proportional directional valve PRM7 consists of a cast iron housing, a special control spool, two centering springs with supporting washers, one or two proportional solenoids, a position sensor or, if need be, of a control box with digital electronics.
The measuring system of the position sensor consists of a differential transformer with core and from the evaluating electronic unit realized in hybrid technique.
With the model without integrated electronic unit, the electric connection of the solenoids is realized by the connector plug to EN 175301-803, with the position sensor output being connected by the G4W1F connector plug. Both connectors are supplied.
The proportional valve with the integrated electronic unit comprises an electronic control box that is mounted, together with the position sensor, on either of the solenoids. The connection of the position sensor with the control box is provided by a cable. With the model with two solenoids, the solenoid mounted opposite the control box is connected with the control box by means of a EN 175301-803, connector. The connection of the supply voltage, control signal, program input and external output of the position sensor is realized by a 5-pin connector (ELKA 5012). The connection of the external feedback is provided by a 5-pin connector, which also has three supply voltages +24 V, +10V and -5V for an external sensor available. The solenoid coils, including the control box, can be turned in a range of ± 90°.The digital control unit enables the proportional valve to be controlled on the basis of data required from two feedback circuits.
In this case the proportional valve can be used as follows:

1. Proportional directional valve
2. Only with the internal feedback from the spool position sensor.
3. Only with the external feedback (pressure sensor, position sensor, etc.).
4. With internal and external feedback.

The outlet current to the electromagnet coils is controlled with the help of PWM. The electronic system is equipped with an internal current feedback. The outlet current in case of need may be modulated with the use of a signal of dynamic lubrication. Single function parameters are set up with the use of appropriate software with the help of a computer connected to the proportional switchboard through a serial interface RS 232.
It is necessary to order a cable in accordance with appropriate ordering number as mentioned on page 4.

The digital control unit utilizes the pulse-with-modulation (PWM) and supplies the solenoids with current proportional to the control signal. The supply current is additionally modulated with a dither frequency. The individual functional parameters are adjusted through software by means of a special programmer, or by means of a computer through the RS 232 interface. The correct function of the digital control unit is signaled by a green LED. The incorrect function (failure) is indicated by a red LED.
As a standard, the proportional valve is delivered with factory setting. The model including also an external feedback shall be consulted with the manufacturer.

With the basic surface treatment, the valve housing is phosphate coated, whereas the surfaces of the solenoids are zinc coated.

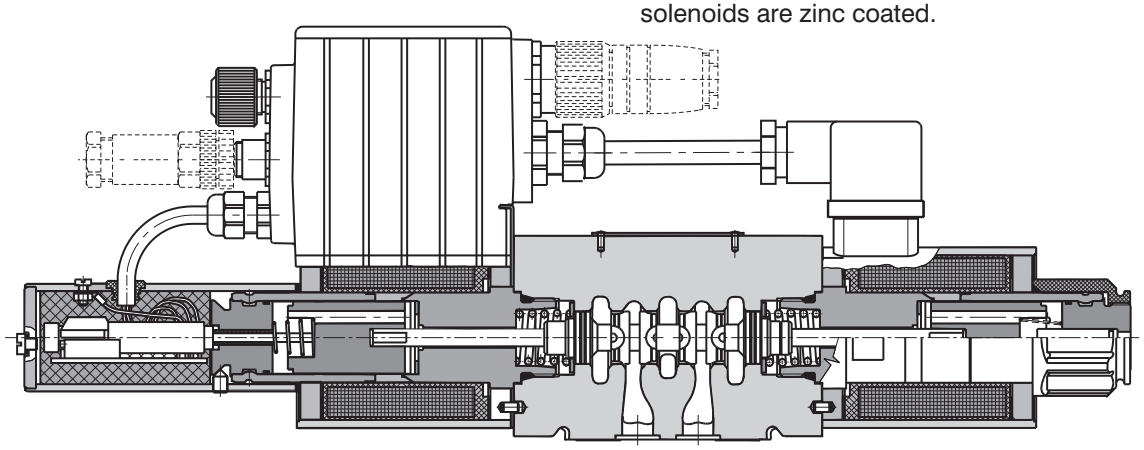

Ordering Code

PRM7-10 □ / □ - □ □ □

Proportional Directional Control Valve

Nominal size **10 (D 05)**

Seals

without designation	NBR
V	FPM (Viton)

Model

S01	position sensor with voltage outlet
S02	position sensor with current outlet
E01	proportional directional valve without feedback
E02S01	proportional directional valve with position feedback
E03	proportional directional valve with external feedback
E04S01	proportional directional valve with position and external feedback

Nominal solenoid supply voltage

12	**supply voltage 12V DC
24	supply voltage 24V DC

** Cannot be supplied as Variant S02

Spool Symbols

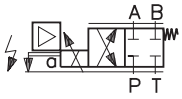		**2Z51**
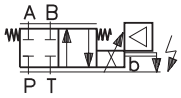		**2Z11**
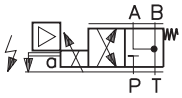		**2Y51**
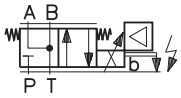		**2Y11**
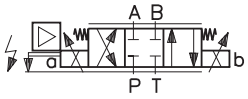		**3Z11**
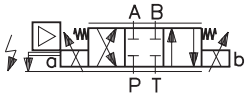	$\frac{q_A}{q_B} = \frac{1}{2}^*$	**3Z12**
		3Y11
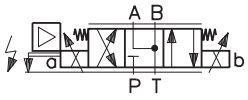	$\frac{q_A}{q_B} = \frac{1}{2}^*$	**3Y12**

Spool SymbolsNominal flow rate at Δp =10 bar (145 PSI)

30	flow 30 L/min (7.925 GPM)
60	flow 60 L/min (15.850 GPM)

***** Model for cylinders with asymmetric piston rod, piston area ratio 1:2

Connectors are to be ordered **separately**,
see ordering number on page 10

Technical Data

Nominal size	mm (US)	10 (D 05)
Max. operating pressure at ports P, A, B	bar (PSI)	350 (5076)
Max. operating pressure at port T	bar (PSI)	210 (3046)
Hydraulic fluid		Hydraulic oils of power classes (HL, HLP) to DIN 51524
Fluid temperature range (NBR / Viton)	°C (°F)	-30 ... +80 (-22 ... +176) / -20 ... +80 (-4 ... +176)
Ambient temperature max.	°C (°F)	+50 (+122)
Viscosity range	mm^2/s (SUS)	20 ... 400 (98 ... 1840)
Maximum degree of fluid contamination		Class 21/18/15 to ISO 4406)
Nominal flow at Δp = 10 bar (145 PSI)	L/min (GPM)	30 (7.93) / 60 (15.85)
Hysteresis - open loop	%	< 6
Hysteresis - closed position loop	%	< 0.5
Weight - PRM7-102 - PRM7-103	kg (lbs)	4.4 (9.70) 5.9 (13.01)
Mounting position		unrestricted
Enclosure type EN 60529		IP65

Technical Data of Position Sensor - Voltage Outlet

Operating pressure	bar (PSI)	max. 350 (5076), static
Electric connection		electrical connector G4W1F Hirschmann *
Contact assignment		1 - Power supply 2 - Command signal 3 - GND 4 - not used
Enclosure type to EN 60529		IP65
Measured distance	mm (in)	8 (0.315)
Operating voltage	V	9.6 ...30 DC
Linearity error	%	< 1
Current consumption at load current of 2 mA	mA	< 15
Output voltage	V	0 ... 5
Output signal range used: 0 Position 1 solenoid - stroke 3.8 mm (0.15 in) 2 solenoids - stroke ± 3.8 mm (0.15 in)	V	 2.5 0.125 - 2.5 0.125 - 4.875
Max. load current	mA	2
Noise voltage - at load current 0 - at load current of 2 mA	mV_{p-p}	 < 20 < 15
Additional output signal error at: Temperature change between 0 ... 80 °C (32 ...176 °F) Between 0 ... -25 °C (32 ... -13 °F) Load change from 0 to 2 mA		 typical < 0.2% / 10K max. 0.5% / 10K max. 0.5% / 10K 0.1%
Input voltage change from 9.6 V to 14.4 V from 14.4 V to 30 V	%	 < 0.1 < 0.25
Long-term drift (30 days)	%	< 0.25
Cut-off frequency 3 dB fall in amplitude Frequency 90°	Hz	 > 600 > 600

* Only for S01 and S02 model.

Technical Data of Position Sensor - Current Outlet

Linearity	%	< 1
Operating pressure	bar (PSI)	to 350 (5076), static
Electrical connection		electrical connector G4W1F Hirschmann *
Contact assigment		1 - Power supply 2 - Command signal 3 - GND 4 - not used
Enclosure type to EN 60529		IP65
Operatin voltage	V	20 ... 30 DC
Current	mA	< 35
Output signal range	mA	4 20
Output signal range used: 0 position 1 solenoid - stroke 3.8 mm (0.15 in) 2 solenoids - stroke ± 3.8 mm (0.15 in)	mA	 12 4.4 ... 12 4.4 ... 19.6
Additional output signal error: - at temperature change from +10 ... 55 °C (50 ...131 °F) - at imjpedance change from 50% - at input voltage change in the range of operating voltage		 0.2% / 10K ≤ 0.1% ≤ 0.05%
Impedance	Ω	≤ 500
Output signal ripple	mA R.M.S.	≤ 0.02
Limit frequency at 3 dB amplitude decrease	Hz	≥ 800

* Only for S01 and S02 model.

Technical Data of Proportional Solenoid

Type of coil	V	12 DC	24 DC
Limiting current	A	1.9	1.1
Resistance at 20 °C	Ω	4.7	13.9

Electronics Data

Supply voltage with polarity inversion protection		V	11.2 ... 28 VDC (residual ripple < 10%)
Input: command signal / according to customer setting			±10V, 0 ... 10V, ±10mA, 4...20mA, 0...20mA,12mA ± 8mA
Input: spool position sensor signal			0...5V
Input: external feedback signal			0...10V, 4...20mA, 0...20mA,
Resolution of the A/D converter			12 bit
Output: solenoids			Two PWM output stages up to max. 3.5 A
PWM frequency		kHz	18
Adjustment of parameters		µs	170
EMC	Interference resistance		61000 - 6 - 2 : 2005
	Radiation resistance		55011 : 1998 class A
Parameter setting	Serial port RS 232 (zero modem). 19200 bauds, 8 data bits, 1 stop bit, no parity. Special software PRM7Conf.		

Accessories

Order number	Content
23093400	Connecting cable to PC - length 2m (6.56ft), CD-ROM with program PRM7Conf and user manual.
23093500	Connecting cable to PC - length 5m (16.40ft), CD-ROM with program PRM7Conf and user manual.
24523400	Connecting cable to PC - length size 2m (6.56ft).
24523500	Connecting cable to PC - length size 5m (16.40ft).

Limit Power

Measured at ν = 32 mm^2/s (156 SUS)

Only for E01 model

Nominal flow 30 L/min (7.93 GPM)

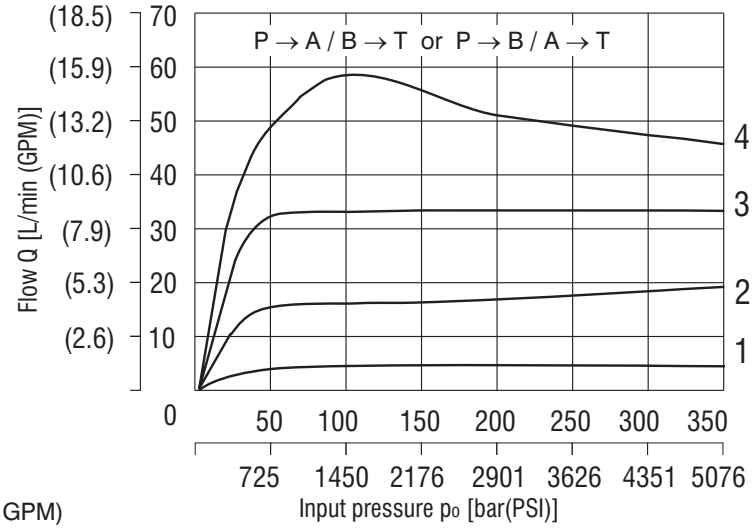

Nominal flow 60 L/min (15.85 GPM)

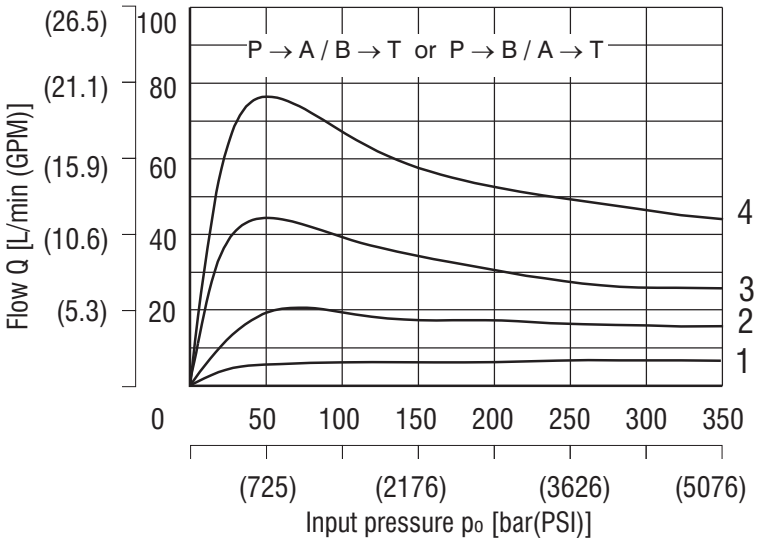

Solenoid current:
1 = 40 %
2 = 60 %
3 = 80 %
4 = 100 %

Flow Characteristics

Measured at input pressure Δp =10 bar (145 PSI), ν = 32 mm^2/s (156 SUS)

Only for E01 model

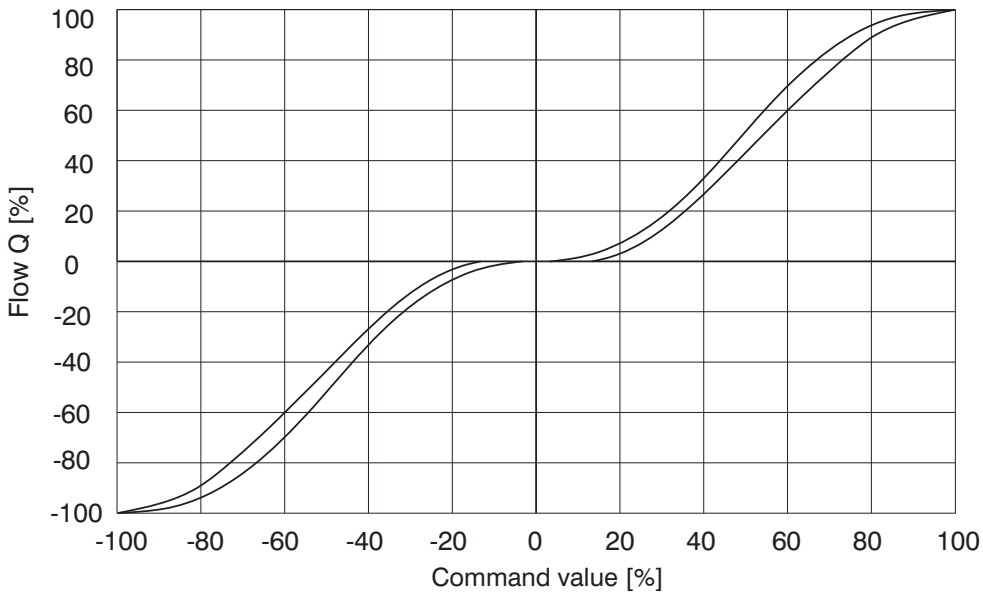

Flow Characteristics

Measured at ν = 32 mm^2/s (156 SUS)

Only for E02S01 model

Q_n = 30 L/min (7.93 GPM) by Δp = 10 bar (145 PSI)

$\Delta \mathbf{p}$ = Valve pressure differential (inlet pressure p_V minus load pressure and return pressure p_T)

$\Delta \mathbf{p_n}$ = Valve pressure differential for nominal flow Q_n

1	Δp_n = 10 bar (145 PSI)
2	Δp = 50 bar (725 PSI)
3	Δp = 160 bar (2321 PSI)
4	Δp = 320 bar (4641 PSI)

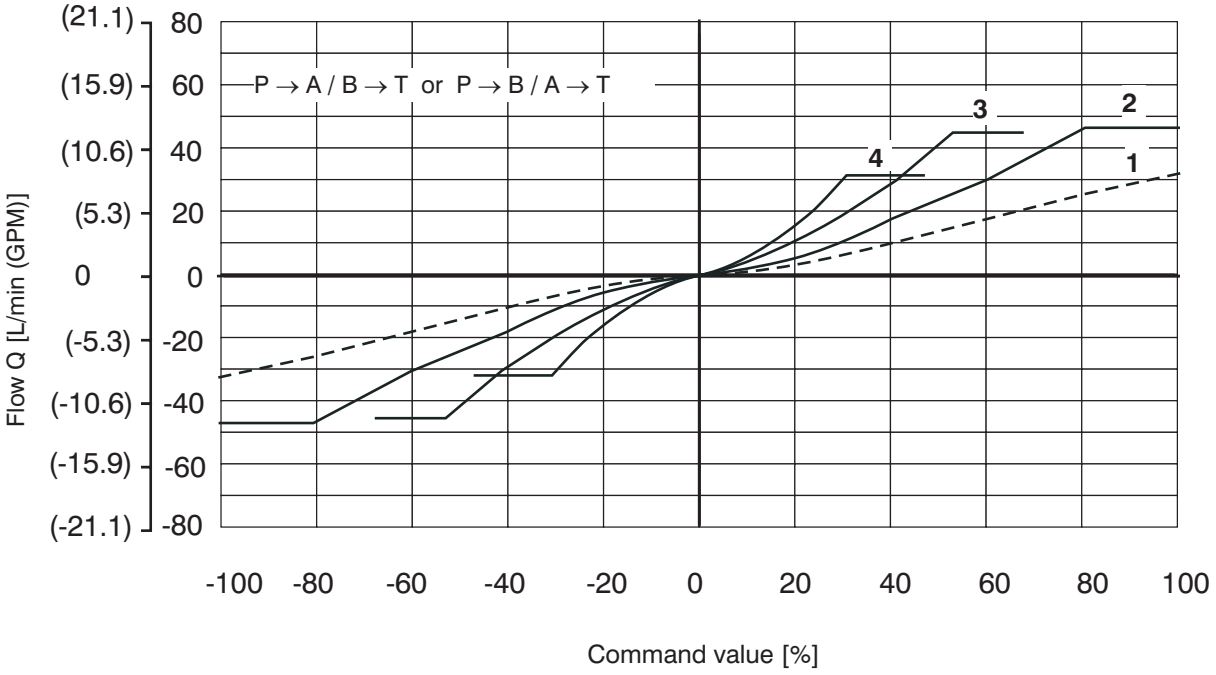

Only for E02S01 model

Q_n = 60 L/min (15.85 GPM) by Δp = 10 bar (145 PSI)

1	Δp_n = 10 bar (145 PSI)
2	Δp = 50 bar (725 PSI)
3	Δp = 160 bar (2321 PSI)
4	Δp = 320 bar (4641 PSI)

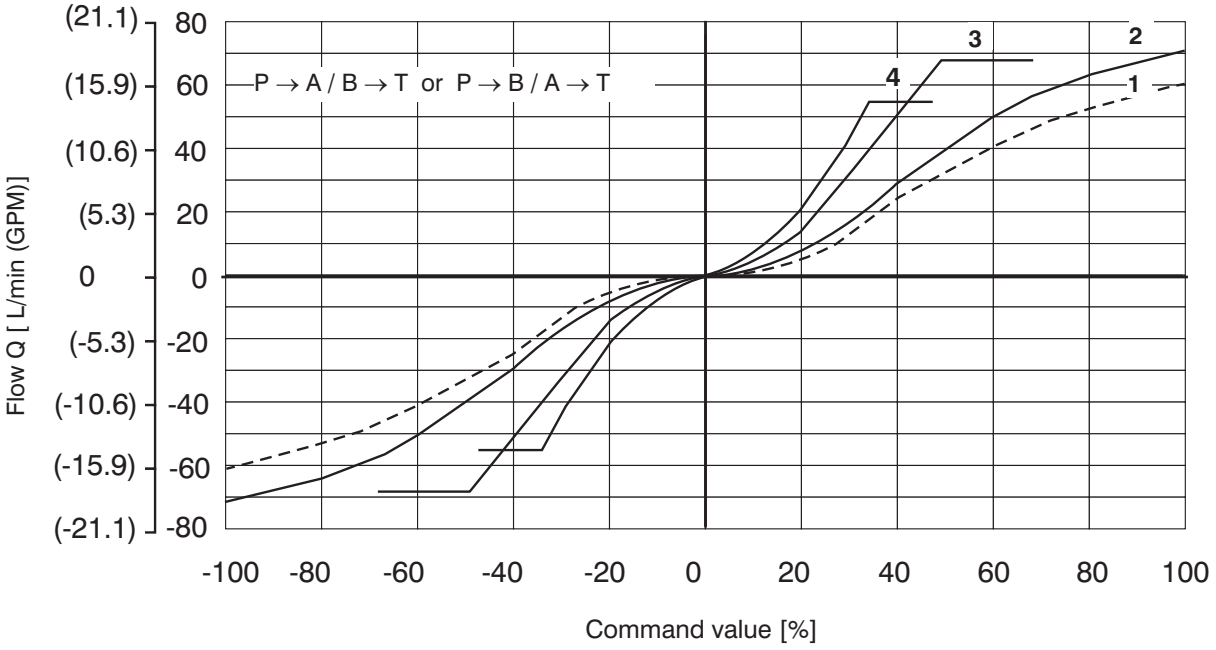

Frequency Reponse

closed position loop. for E02S01 model

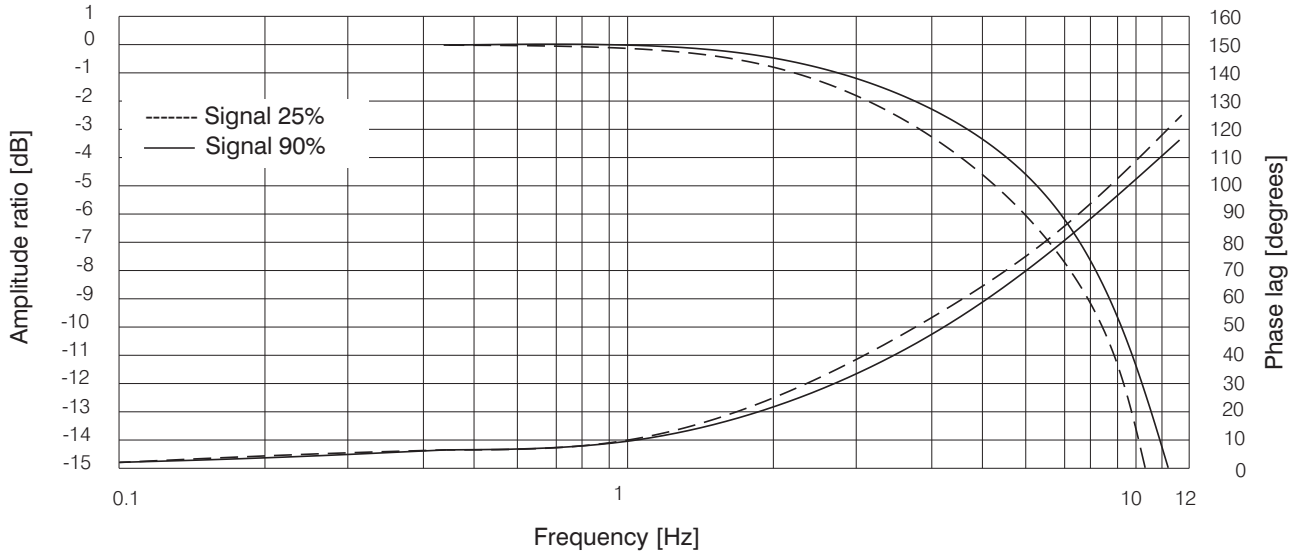

Connector Connection

K1

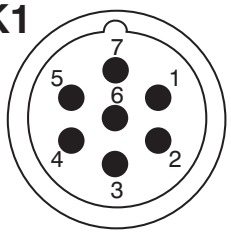

Connector K1- type M 23 (male)		
PIN	**Technical data**	**Description**
1	* Power supply input	11.2 .... 28V DC
2	* Ground (power supply)	0V
3	Control signal	according to configuration
4	Ground (signal)	0V
5	Power reference signal	+10V DC/max.10mA
6	Control signal of position sensor spool	0 ....5V
7	* Protection earth lead (PE)	---

* Recommended min. lead cross section 0.75mm^2

K2

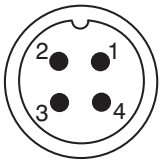

Connector K2 - type M12x1 (male)		
PIN	**Technical data**	**Description**
1	TxD	standard
2	RxD	RS 232
3	Ground (signal)	0V
4	Not used	

K3

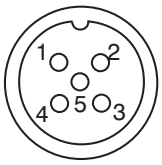

Connector K3 - type M12x1 (female)		
PIN	**Technical data**	**Description**
1	Power supply output	11.2 .... 28V DC/max.100mA
2	Signal of external feedback	according to configuration
3	Ground	0V
4	Not used	
5	Not used	

K2 - Connection RS232 M12x1 (4 PIN)
For programing the electronics.

K1 - Main inplut connector M23 (7PIN)
Cable diameter 8 ...12mm.

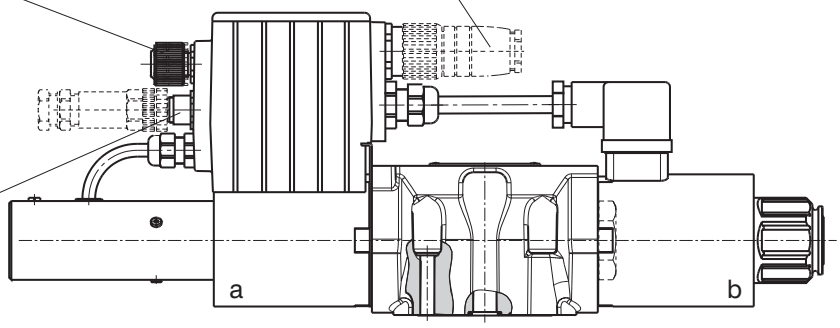

K3 - Conektor M12x1 (5PIN)
External feedback signal (it presented only for E03 and E04S01configurations).

Factory Settings

Item	Model							
	E01		E02S01		E03		E04S01	
	1 Magnet	2 Magnet	1 Magnet	2 Magnet	1 Magnet	2 Magnet	1 Magnet	2 Magnet
Control signal	0...10 V	± 10 V	0...10 V	± 10 V	0...10 V	± 10 V	0...10V	± 10 V
Signal external feedback	-	-	-	-	0...10 V			
Output position sensor spool	-	-	0...5 V		-		0...5 V	

Valve Dimensions

Dimensions in millimeters (inches)

102, 103 ... S01
102, 103 ... S02

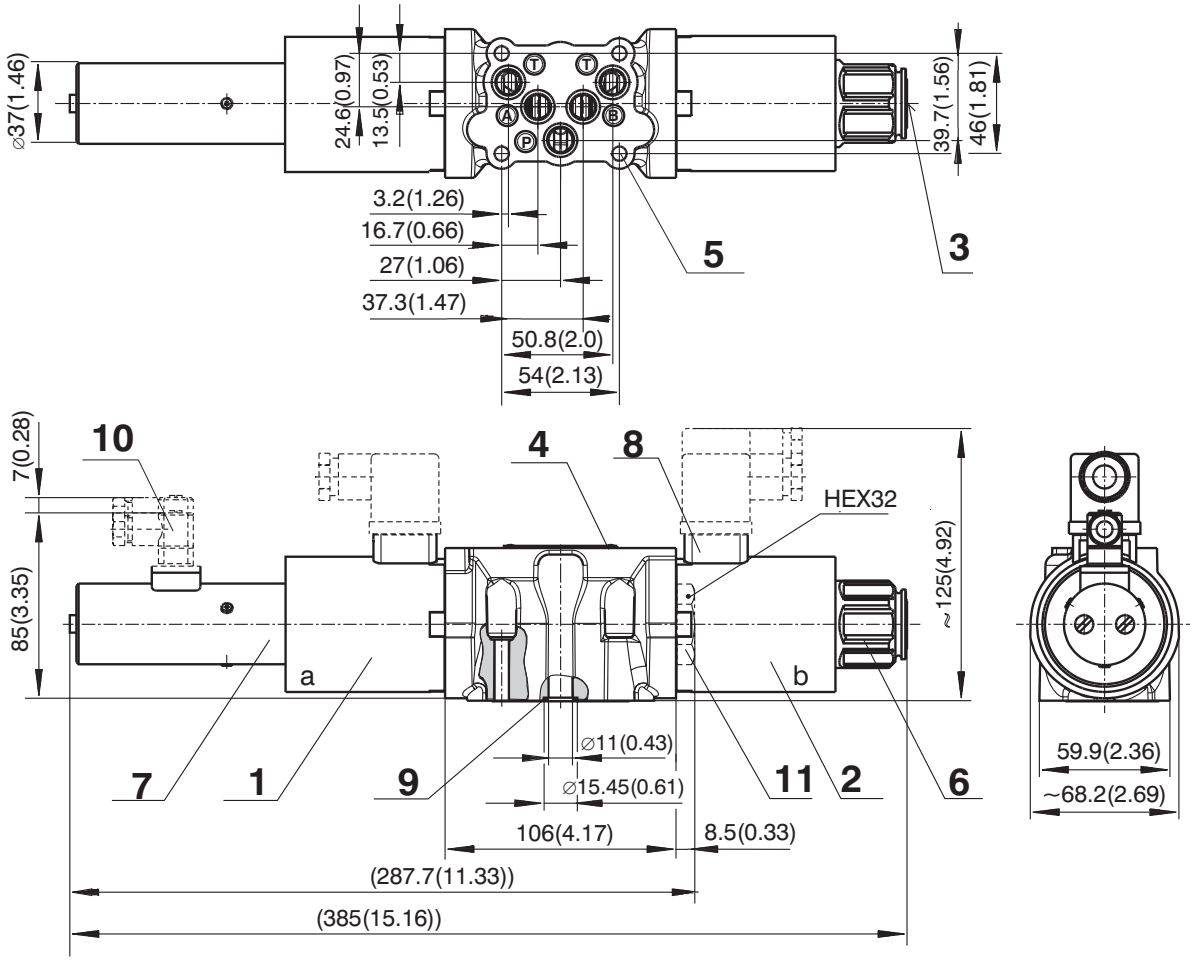

1 Solenoid a
2 Solenoid b
3 Manual overid
4 Name plate
5 4 mounting holes
6 Solenoid fixing nut
7 Position sensor
8 Solenoid supply connector
9 Square ring 12.42 x 1.68 (5 pcs.), supplied in delivery packet
10 Position sensor connector
11 Plug screw for valve with one solenoid, HEX 32, configurations 2Z51, 2Z11

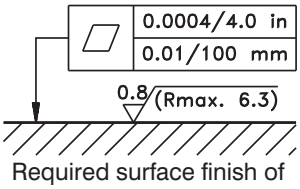

Required surface finish of interface

Valve Dimensions

Dimensions in millimeters (inches)

102, 103 ... E01 - without connector plug for spool position feedback

102, 103 ... E03

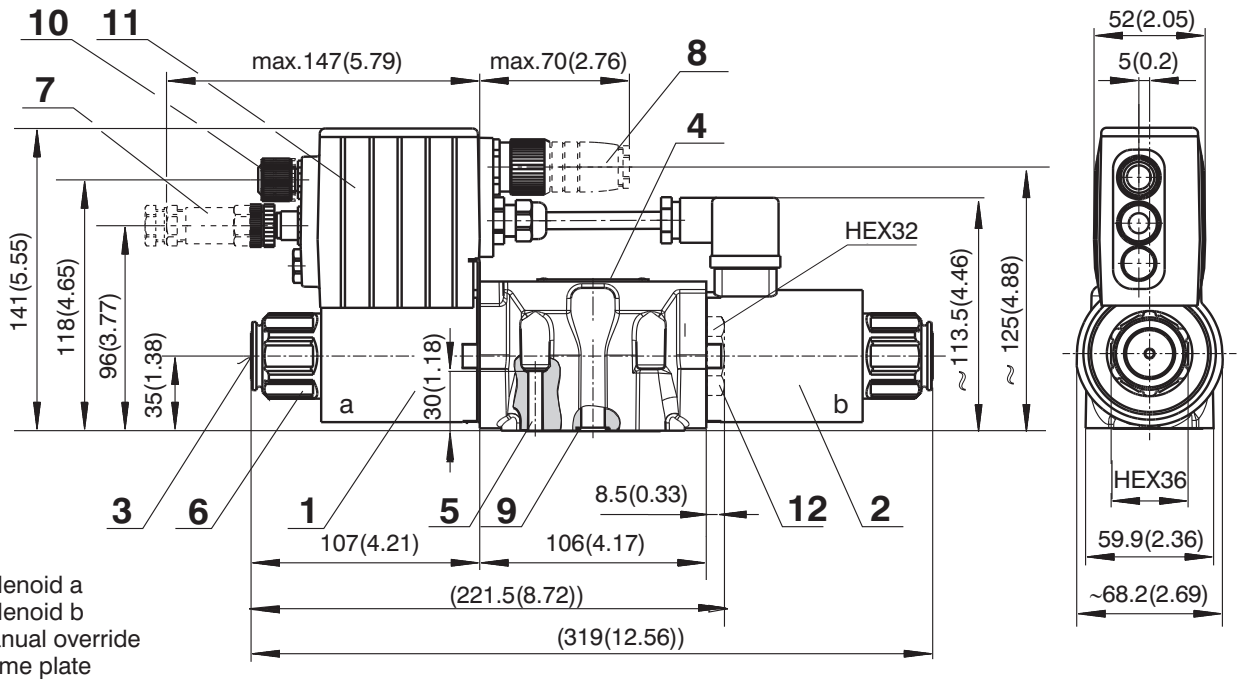

1 Solenoid a
2 Solenoid b
3 Manual override
4 Name plate
5 4 mounting holes
6 Solenoid fixing nut
7 Connector M12x1 for connection of external feedback
8 Main supply connector M23
9 Square ring 12.42 x 1.68 (5 pcs.), supplied in delivery packet
10 Cover of connector M12x1 for programming
11 Plastic box with integrated electronics
12 Plug screw for valve with one solenoid, HEX 32, configurations 2Z51, 2Z11

102, 103 ... E02S01 - without connector plug for spool position feedback

102, 103 ... E04S01

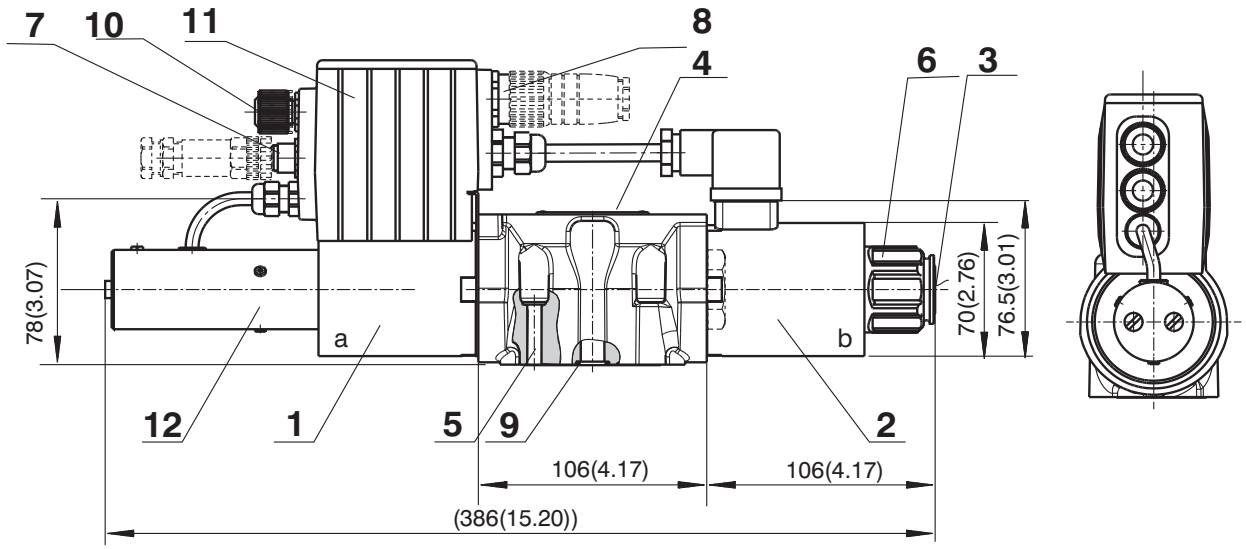

1 Solenoid a
2 Solenoid b
3 Manual overrideí
4 Name plate
5 4 mounting holes
6 Solenoid fixing nut
7 Connector M12x1 for connection of external feedback
8 Main supply connector M23
9 Square ring 12.42 x 1.68 (5 pcs.), supplied in delivery packet
10 Cover of connector M12x1 for programming
11 Plastic box with integrated electronics
12 Position sensor

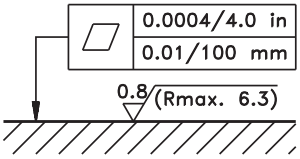

Required surface finish of interface

Spare Parts

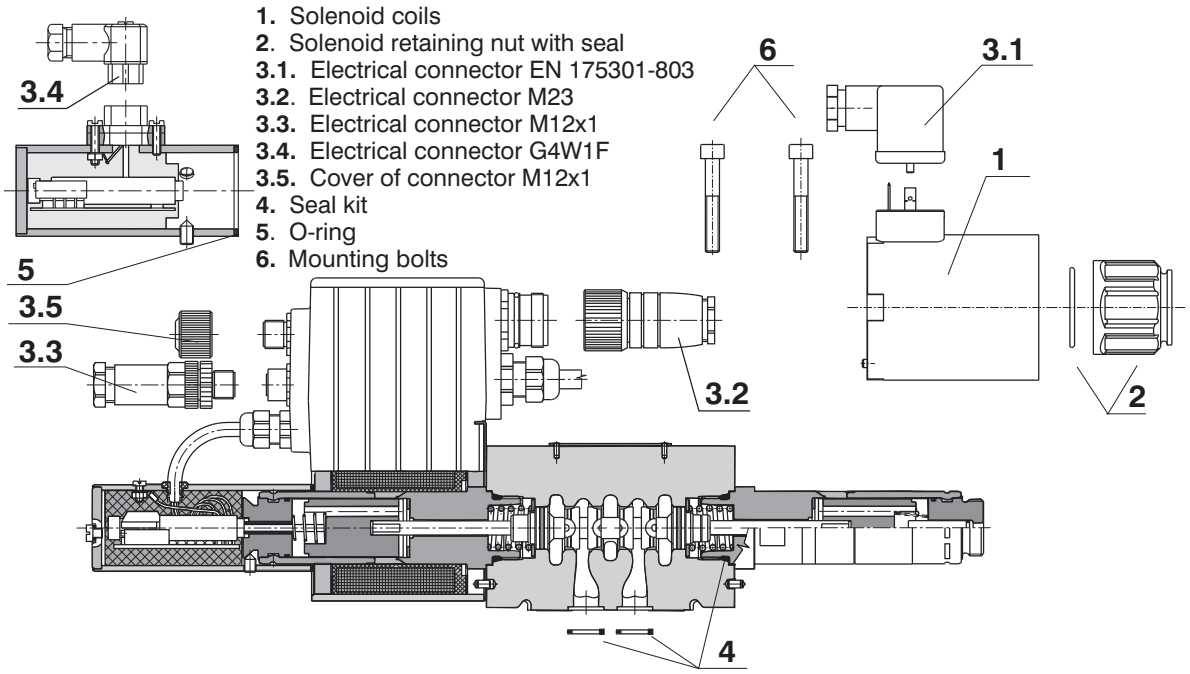

1. Solenoid coil

Solenoid type	Ordering number
01200	16195800
02400	16196200

2. Solenoid retaining nut with seal

Type of the nut	Seal ring	Ordering number
Standard nut	30 x 2	15900800

3.1. Electrical connector EN 175301-803

Type designation	Type	Maximum input voltage	Connector A grey	Connector B black
			Ordering number	
K5	without rectifier - M16x1.5 (bushing bore ⌀ 4-6 mm)	230 V DC	16202600	16202500

3.2. Electrical connector M23 - 7PIN (female)

Ordering number	345579500001

3.3. Electrical connector M12x1- 5PIN (male), it presented only for E03 and E04S01 configurations

Ordering number		358359000002

3.4. Electrical connector G4W1F

Ordering number	358358932157

3.5. Cover of connector M12x1

Ordering number	23090600

4. Seal kit

Type	Dimensions, number		Order number
	Square ring	O-ring	
Standard - NBR70	12.42 x 1.68 (5 pcs.)	23.81 x 2.62 (2 pcs.)	23114300
Viton	12.42 x 1.68 (5 pcs.)	23.47 x 2.62 (2 pcs.)	23114400

5. O-ring

Standard - NBR70	32 x 2 (1 pc.)	273111014140

6. Mounting bolts

Dimensions, number	Tightening torque	Ordering number
M6 x 40 DIN 912-10.9 (4 pcs.)	14 Nm (10.33 lbf.ft)	15847700

Caution!

- The packing foil is recyclable. The protective plate can be returned to manufacturer.
- The technical information regarding the product presented in this catalogue is for descriptive purposes only. It should not be construed in any case as a guaranteed representation of the product properties in the sense of the law.

ARGO-HYTOS s.r.o. CZ - 543 15 Vrchlabí
Tel.: +420-499-403 111
E-mail: info.cz@argo-hytos.com
www.argo-hytos.com

Subject to alteration without notice!